INCH-POUND
MIL-DTL-3786/4P
24 November 2024
SUPERSEDING
MIL-DTL-3786/4N
26 July 2019

DETAIL SPECIFICATION SHEET

SWITCH, ROTARY, CLOSED CONSTRUCTION, 2 AMPERES, LOW LEVEL, POSITIVE SHAFT GROUNDING, FLUX SEAL, STYLE SR04

This specification is approved for use by all Departments and Agencies of the Department of Defense.

The complete requirements for acquiring the switches described herein shall consist of this specification and the latest issue of MIL-DTL-3786.

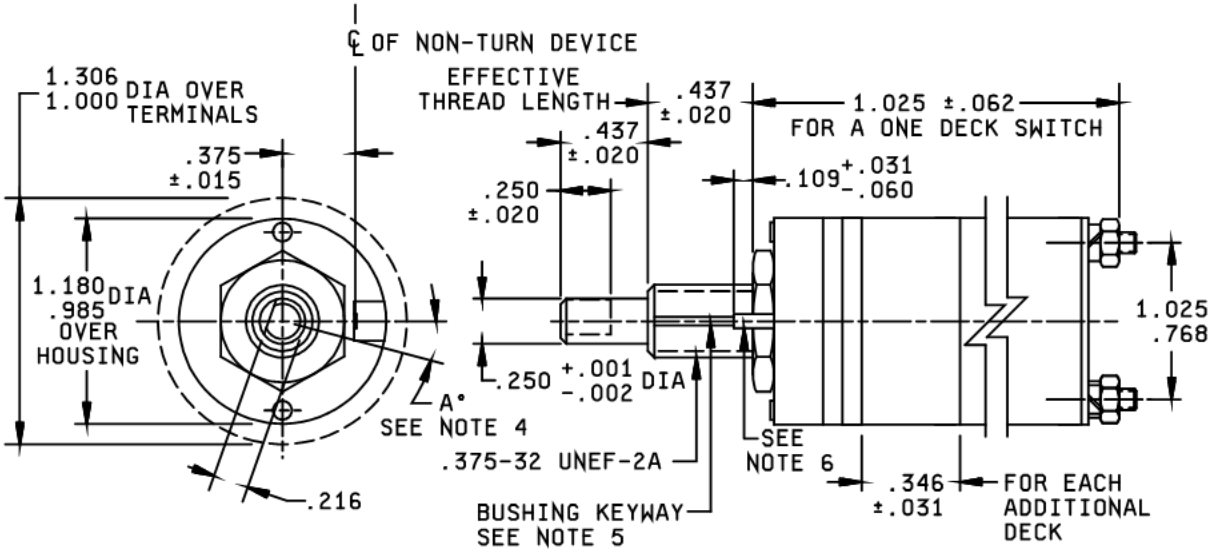

NOTES:

1. Dimensions are in inches.
2. DELETED
3. Unless otherwise specified, tolerances are ±.005 and ±3° on angles, (nonaccumulative).
4. Shaft-flat angle A° is the angle between a line through the center of the shaft and center of the nonturn device, and another line through the center of the shaft and perpendicular to the shaft flat, with switch in the extreme counterclockwise position. This refers to panel position; see figure 2 for terminal location.
5. Bushing keyway .069 ±.005 wide by .036 ±.003 deep measured from a .375 diameter.
6. For sealed shaft and bushing switches, integral tab shall not be furnished. Busing keyway shall be used for nonturn characteristic. See figure 3.

FIGURE 1. Dimension and configuration style SR04-1, single shaft.

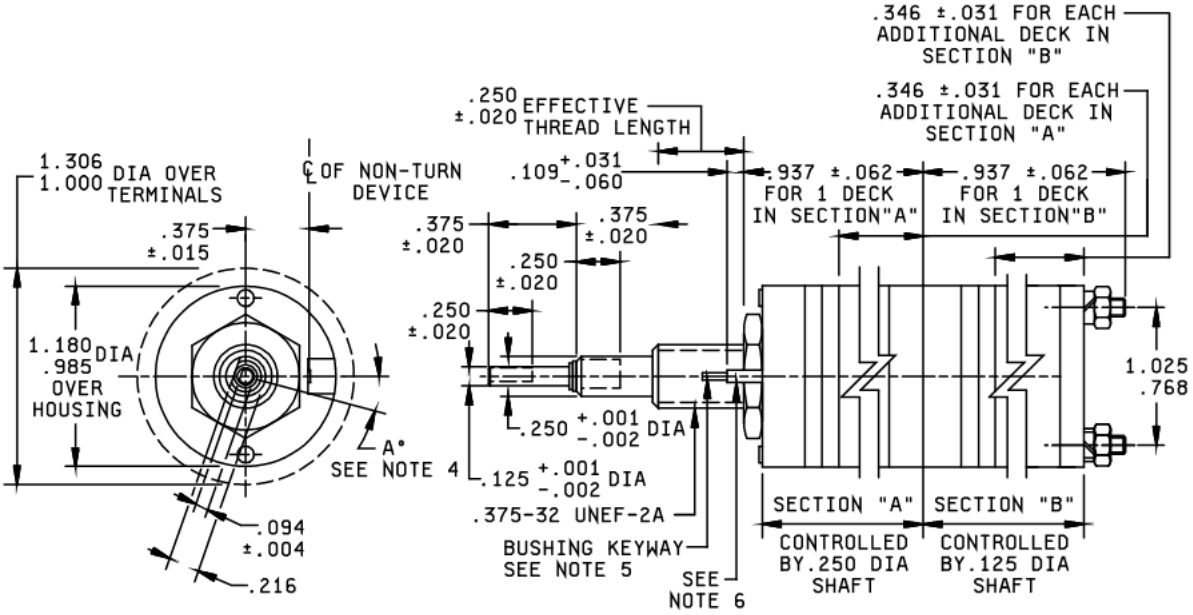

NOTES:

1. Dimensions are in inches.
2. DELETED
3. Unless otherwise specified, tolerances are ±.005 and ±3° on angles, (nonaccumulative).
4. Shaft-flat angle A° is the angle between a line through the center of the shaft and center of the nonturn device, and another line through the center of the shaft and perpendicular to the shaft flat, with switch in the extreme counterclockwise position. This refers to panel position; see figure 2 for terminal location.
5. Bushing keyway .069 ±.005 wide by .036 ±.003 deep measured from a .375 diameter.
6. For sealed shaft and bushing switches, integral tab shall not be furnished. Busing keyway shall be used for nonturn characteristic. See figure 3.

FIGURE 1. Dimensions and configurations (style SR04-2, concentric shaft) - Continued.

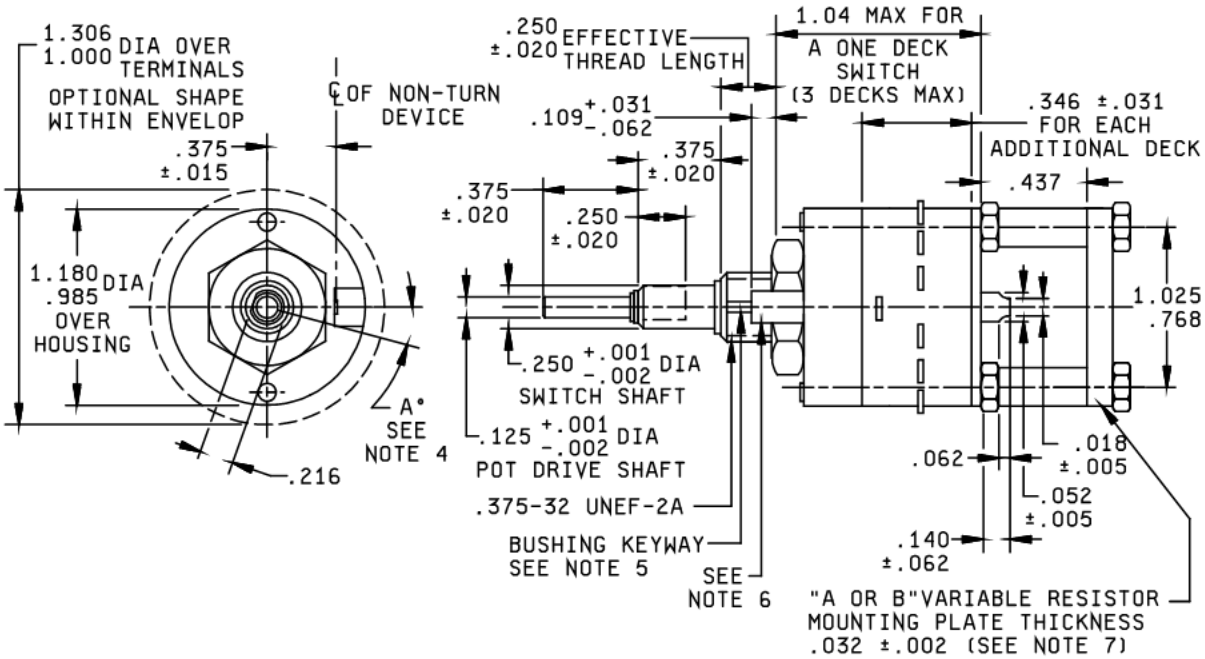

NOTES:

1. Dimensions are in inches.
2. DELETED
3. Unless otherwise specified, tolerances are ±.005 and ±3° on angles, (nonaccumulative).
4. Shaft-flat angle A° is the angle between a line through the center of the shaft and center of the nonturn device, and another line through the center of the shaft and the center of the nonturn device, and another line through the center of the.250 diameter shaft and perpendicular to the shaft flat, with switch in the extreme counterclockwise position. This refers to panel position; see figure 2 for terminal location. The .125 diameter shaft does not have a flat.
5. Bushing keyway .069 ±.005 wide by .036 ±.003 deep measured from a .375 diameter.
6. For sealed shaft and bushing switches, integral tab shall not be furnished. Busing keyway shall be used for nonturn characteristic.
7. Resistor mounting plates: Two resistor mounting plates shall be made of corrosion resistant steel, and shall be of the configuration shown on figure 1 (resistor mounting plates). These plates are designed to allow alignment of switch position 1 with full counterclockwise stop of resistor (viewed from shaft end). Only one of the two plates provided with switch is to be used in adapting switch to resistor.
8. Variable resistors: Variable resistors shall be in accordance with the styles covered in MIL-PRF-94/3 and MIL-PRF-94/5 with N (standard) type bushings, and SL type operating shafts for MIL-PRF-94/3 and SB type operating shafts for MIL-PRF-94/5.

FIGURE 1. Dimensions and configuration (style SR04-3, ADD-A-POT) - Continued.

VARIABLE RESISTOR MOUNTING PLATE
"A" FOR USE WITH MIL-PRF-94/2(RV5) AND
MIL-PRF-94/3(RV6) RESISTORS

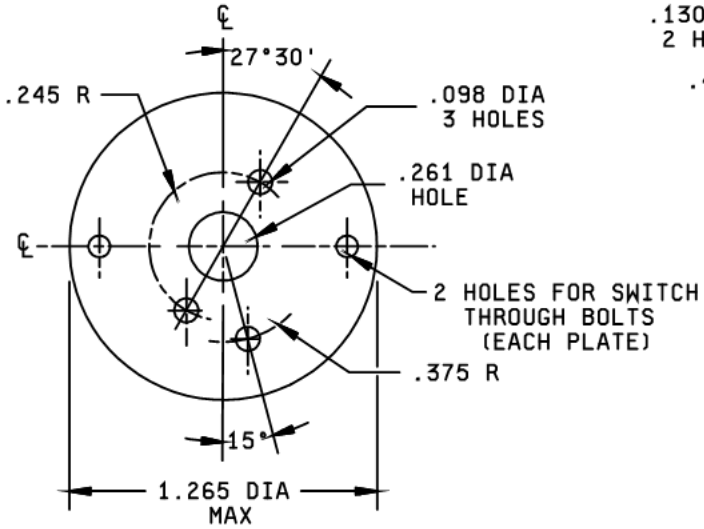

VARIABLE RESISTOR MOUNTING PLATE
"B" FOR USE WITH MIL-PRF-94/4(RV2) AND
MIL-PRF-94/5(RV4) RESISTORS

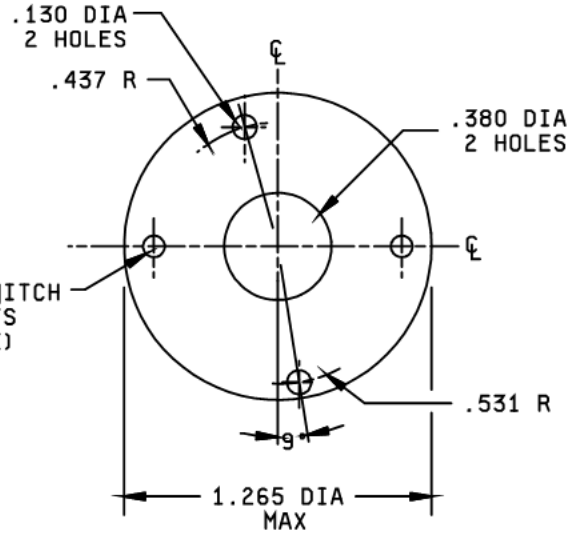

NOTES:
1. Dimensions are in inches.
2. Unless otherwise specified, tolerances are ±.003 on diameters, ±.005 on all other dimensions, and ±2° on angles.

FIGURE 1. Dimensions and configurations (resistor mounting plates for SR04-3) - Continued.

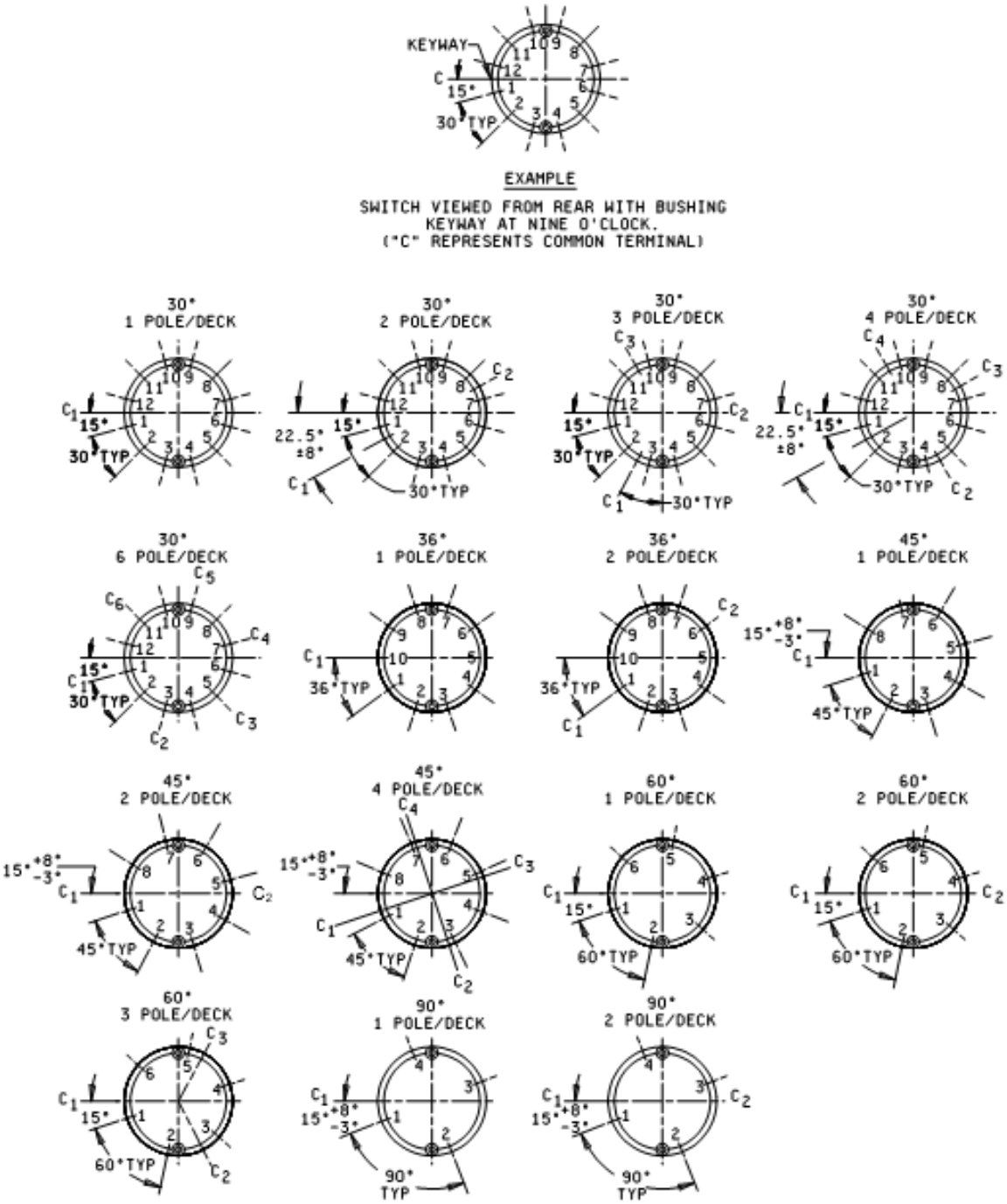

NOTES:
1. Dimensions are in inches.
2. Unless otherwise specified, tolerances are ±.003 on diameters, ±.005 on all other dimensions, and ±2° on angles.

FIGURE 2. Rear view of terminal configurations.

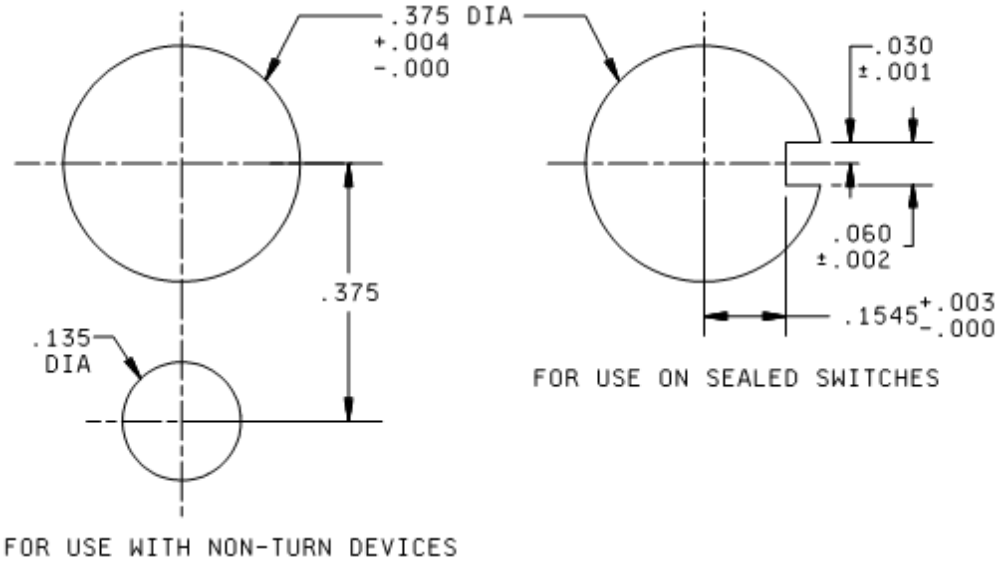

NOTES:
1. Dimensions are in inches.
2. Unless otherwise specified, tolerances are ±.003 on diameters, ±.005 on all other dimensions, and ±2° on angles.

FIGURE 3. Recommended panel cutouts.

REQUIREMENTS:

Design and construction:

Dimensions and configuration: See figures 1 and 2. Angle "A" is 15° for switches of 30°, 45°, 60°, and 90° angles of throw; 36° for switches of 36° angle of throw.

Torque (stops): Stops shall be set in a clockwise direction from position number 1, when viewed from the shaft end. Stops, when supplied, shall withstand a 15 pound-inch torque in single shaft switches, and a 10 pound-inch torque in concentric shaft switches.

Rotational torque: The minimum and maximum values of torque determined for shaft rotation shall be within the limits specified in table I. The rotational torque shall not change more than ±50 percent from its initial value and shall be not less than the minimum torque specified.

Terminal strength:

Bend: Applicable.

TABLE I. Rotational-torque limits.

Total number of switch poles	Temperature	Torque (lb-inch)	
		Minimum	Maximum
Less than 4	Room	.5	2.5
	Minimum	.5	3.0
4 through 8	Room	1.0	4.5
	Minimum	1.0	5.0
More than 8	Room	1.75	7.0
	Minimum	1.75	8.0

Life (rotational): The test loads for the applicable circuit conditions shall be as specified in table II. Each of the loads specified for the applicable environmental condition shall be switched by at least one rotor contact of the switch.

Extent of qualification: "K" construction style qualifies "J", "F", and "E" construction style for the same switches provided two sample units of "J", "F", and "E" construction switches are tested to explosion requirement paragraph to verify explosion proof capability.

Positive shaft grounding: Applicable when specified in the Part or Identifying Number (PIN). Number of measurements per activation - one in each position.

Low level: Applicable when specified in PIN.

TABLE II. Circuit value for life (rotational) test.

Environmental condition	Inductive load (2.8 henries)		Resistive load	
	Milliamperes	Volts, dc	Amperes	Volts
At atmospheric pressure and elevated temperature (+85°C or +125°C) (25,000 cycles)	100	28	.250	28 dc
			.075	115 V rms 60 Hz
At reduced barometric pressure (approximately +25°C) (25,000 cycles)	25	28	.200	28 dc
			.020	115 V rms 60 Hz
At atmospheric pressure and room temperature (approximately +25°C) (10,000 cycles) 1/ 2/ 3/	250	28	1.25	28 dc
			2.0	115 V rms 60 Hz

1/ Three additional samples shall be run for qualification. Switch to be tested shall be PIN M2786/4-0549, -3549, or -5549.
2/ The contact resistance (applicable to ac and dc), after life tests, shall not exceed 50 milliohms.
3/ Dielectric withstanding voltage (applicable to ac and dc): The magnitude of the test voltage for the dielectric withstanding voltage test shall be 750 volts, ac.

Flux seal: Applicable to J and K construction only.

Ordering data: Acquisition documents should specify the following:

a. Title, number, and date of this specification sheet, and the military PIN as listed in table III or coded by tables IV, V, and VI.

b. For switches not covered by military PIN, acquisition shall be in accordance with the ordering data of MIL-DTL-3786 (for switches covered by specification sheets).

c. Switches covered by table III are Style SR04-1 and SR04-3 units. Switches covered by table VI are style SR04-1. Style SR04-2 should be ordered in accordance with the ordering data of MIL-DTL-3786 (for switches covered by specification sheets).

Construction style: See table III or table VI.

Angle of throw and maximum number of poles per deck:

a. 30° - 6 poles

b. 36° - 2 poles

c. 45° - 4 poles

d. 60° - 3 poles

e. 90° - 2 poles

Insulation material: Symbol P.

Temperature-life characteristic: See table III or VI.

Mounting hardware: Each switch shall be supplied with two hexagon nuts in accordance with MS25082, and one internal-tooth lockwasher in accordance with NASM35333.

Vibration grade: Symbol 3 (10 to 2,000 Hz).

Shock type: Symbol B (high and medium impact).

Altitude: Symbol C (70,000 ft).

Military PIN: The PIN shall be assigned using example A, which consists of a dash number from table III, and appropriate suffix letter as required. If the desired characteristics are not defined, the PIN shall be assigned by using the code letters from tables IV, V, and VI as described in example B illustrated below:

Example A:

M3786/4- 0001 G L

Switching characteristics (see table III)

Add the letter G if positive shaft grounding is required

Add the letter L for low level requirement

PIN M3786/4-0001GL identifies a closed construction, explosion proof rotary switch with 1 deck, 1 pole, 30° angle of throw, 2 positions per pole, with nonshorting switching characteristics a grounded shaft and low level capabilities.

Example B:

M3786/4- BB CL E

Switching characteristics (see table IV)

Angle of throw, poles per deck and number of positions per pole (see table V)

Type construction, low level capability shaft grounding, temperature life characteristic, and shock type (see table VI)

PIN M3786/4-BBCLE identifies a rotary switch that is explosion proof, flux proof, closed construction, sealed shaft and panel seal, 2 decks (shorting and nonshorting), 45° angle of throw, 2 poles per deck, 4 positions per pole, temp-life C, shock type B, with a grounded shaft and low level capabilities.

Superseded PIN: See table VII.

TABLE III. Switching characteristics and PIN's (M3786/4-).

Dash Number			Angle of throw	No. of decks	Poles per decks	Position per pole	Switching characteristic (S or NS)
Construction: E Temp.-life characteristic: B Style: SR04-1	Construction: E Temp.-life characteristic: C Style: SR04-1	Construction: F Temp.-life characteristic: C Style: SR04-1					
0001	3001	5001	30	1	1	2	NS
0002	3002	5002	"	"	"	3	"
0003	3003	5003	"	"	"	4	"
0004	3004	5004	"	"	"	5	"
0005	3005	5005	"	"	"	6	"
0006	3006	5006	"	"	"	7	"
0007	3007	5007	"	"	"	8	"
0008	3008	5008	"	"	"	9	"
0009	3009	5009	"	"	"	10	"
0010	3010	5010	"	"	"	11	"
0011	3011	5011	"	"	"	12 1/	"
0012	3012	5012	"	"	2	2	"
0013	3013	5013	"	"	"	3	"
0014	3014	5014	"	"	"	4	"
0015	3015	5015	"	"	"	5	"
0016	3016	5016	"	"	"	6	"
	3017	5017	"	"	3	2	"
	3018	5018	"	"	"	3	"
	3019	5019	"	"	"	4	"
0020	3020	5020	"	"	4	2	"
0021	3021	5021	"	"	"	3	"
0022	3022	5022	"	"	6	2	"
0023	3023	5023	"	2	1	2	"
0024	3024	5024	"	"	"	3	"
0025	3025	5025	"	"	"	4	"
0026	3026	5026	"	"	"	5	"
0027	3027	5027	"	"	"	6	"
0028	3028	5028	"	"	"	7	"
0029	3029	5029	"	"	"	8	"
0030	3030	5030	"	"	"	9	"
0031	3031	5031	"	"	"	10	"
0032	3032	5032	"	"	"	11	"
0033	3033	5033	"	"	"	12 1/	"
0034	3034	5034	"	"	2	2	"
0035	3035	5035	"	"	"	3	"
0036	3036	5036	"	"	"	4	"
0037	3037	5037	"	"	"	5	"
0038	3038	5038	"	"	"	6	"
	3039	5039	"	"	3	2	"
	3040	5040	"	"	"	3	"
	3041	5041	"	"	"	4	"

TABLE III. Switching characteristics and PIN's (M3786/4-) - Continued.

Dash Number			Angle of throw	No. of decks	Poles per decks	Position per pole	Switching characteristic (S or NS)
Construction: E Temp.-life characteristic: B Style: SR04-1	Construction: E Temp.-life characteristic: C Style: SR04-1	Construction: F Temp.-life characteristic: C Style: SR04-1					
0042	3042	5042	30	2	4	2	NS
0043	3043	5043	"	"	"	3	"
0044	3044	5044	"	"	6	2	"
0045	3045	5045	"	3	1	2	"
0046	3046	5046	"	"	"	3	"
0047	3047	5047	"	"	"	4	"
0048	3048	5048	"	"	"	5	"
0049	3049	5049	"	"	"	6	"
0050	3050	5050	"	"	"	7	"
0051	3051	5051	"	"	"	8	"
0052	3052	5052	"	"	"	9	"
0053	3053	5053	"	"	"	10	"
0054	3054	5054	"	"	"	11	"
0055	3055	5055	"	"	"	12 1/	"
0056	3056	5056	"	"	2	2	"
0057	3057	5057	"	"	"	3	"
0058	3058	5058	"	"	"	4	"
0059	3059	5059	"	"	"	5	"
0060	3060	5060	"	"	"	6	"
	3061	5061	"	"	3	2	"
	3062	5062	"	"	"	3	"
	3063	5063	"	"	"	4	"
0064	3064	5064	"	"	4	2	"
0065	3065	5065	"	"	"	3	"
0066	3066	5066	"	"	6	2	"
0067	3067	5067	"	4	1	2	"
0068	3068	5068	"	"	"	3	"
0069	3069	5069	"	"	"	4	"
0070	3070	5070	"	"	"	5	"
0071	3071	5071	"	"	"	6	"
0072	3072	5072	"	"	"	7	"
0073	3073	5073	"	"	"	8	"
0074	3074	5074	"	"	"	9	"
0075	3075	5075	"	"	"	10	"
0076	3076	5076	"	"	"	11	"
0077	3077	5077	"	"	"	12 1/	"
0078	3078	5078	"	"	2	2	"
0079	3079	5079	"	"	"	3	"
0080	3080	5080	"	"	"	4	"
0081	3081	5081	"	"	"	5	"
	3082	5082	"	"	"	6	"
	3083	5083	30	4	3	2	NS
	3084	5084	"	"	"	3	"
	3085	5085	"	"	"	4	"
0086	3086	5086	"	"	4	2	"
0087	3087	5087	"	"	"	3	"
0088	3088	5088	"	"	6	2	"
0089	3089	5089	"	5	1	2	"
0090	3090	5090	"	"	"	3	"
0091	3091	5091	"	"	"	4	"
0092	3092	5092	"	"	"	5	"
0093	3093	5093	"	"	"	6	"

TABLE III. Switching characteristics and PIN's (M3786/4-) - Continued.

Dash Number			Angle of throw	No. of decks	Poles per decks	Position per pole	Switching characteristic (S or NS)
Construction: E Temp.-life characteristic: B Style: SR04-1	Construction: E Temp.-life characteristic: C Style: SR04-1	Construction: F Temp.-life characteristic: C Style: SR04-1					
0094	3094	5094	"	"	"	7	"
0095	3095	5095	"	"	"	8	"
0096	3096	5096	"	"	"	9	"
0097	3097	5097	"	"	"	10	"
0098	3098	5098	"	"	"	11	"
0099	3099	5099	"	"	"	12 1/	"
0100	3100	5100	"	"	2	2	"
0101	3101	5101	"	"	"	3	"
0102	3102	5102	"	"	"	4	"
0103	3103	5103	"	"	"	5	"
0104	3104	5104	"	"	"	6	"
	3105	5105	"	"	3	2	"
	3106	5106	"	"	"	3	"
	3107	5107	"	"	"	4	"
0108	3108	5108	"	"	4	2	"
0109	3109	5109	"	"	"	3	"
0110	3110	5110	"	6	1	2	"
0111	3111	5111	"	"	"	3	"
0112	3112	5112	"	"	"	4	"
0113	3113	5113	"	"	"	5	"
0114	3114	5114	"	"	"	6	"
0115	3115	5115	"	"	"	7	"
0116	3116	5116	"	"	"	8	"
0117	3117	5117	"	"	"	9	"
0118	3118	5118	"	"	"	10	"
0119	3119	5119	"	"	"	11	"
0120	3120	5120	"	"	"	12 1/	"
0121	3121	5121	"	"	2	2	"
0122	3122	5122	"	"	"	3	"
0123	3123	5123	"	"	"	4	"
0124	3124	5124	30	6	2	5	NS
0125	3125	5125	"	"	"	6	"
	3126	5126	"	"	3	2	"
	3127	5127	"	"	"	3	"
	3128	5128	"	"	"	4	"
0129	3129	5129	"	"	4	2	"
0130	3130	5130	"	"	"	3	"
0131	3131	5131	"	7	1	2	"
0132	3132	5132	"	"	"	3	"
0133	3133	5133	"	"	"	4	"
0134	3134	5134	"	"	"	5	"
0135	3135	5135	"	"	"	6	"
0136	3136	5136	”	”	”	7	"
0137	3137	5137	”	”	”	8	"
0138	3138	5138	”	”	”	9	"
0139	3139	5139	”	”	”	10	"
0140	3140	5140	”	”	”	11	"
0141	3141	5141	”	”	”	12 1/	"
0142	3142	5142	”	”	2	2	"
0143	3143	5143	”	”	”	3	"
0144	3144	5144	”	”	”	4	"
0145	3145	5145	”	”	”	5	"
0146	3146	5146	”	”	”	6	"

TABLE III. Switching characteristics and PIN's (M3786/4-) - Continued.

Dash Number			Angle of throw	No. of decks	Poles per decks	Position per pole	Switching characteristic (S or NS)
Construction: E Temp.-life characteristic: B Style: SR04-1	Construction: E Temp.-life characteristic: C Style: SR04-1	Construction: F Temp.-life characteristic: C Style: SR04-1					
	3147	5147	”	”	3	2	"
	3148	5148	”	”	”	3	"
	3149	5149	”	”	”	4	"
0150	3150	5150	”	8	1	2	"
0151	3151	5151	”	”	"	3	"
0152	3152	5152	”	”	”	4	"
0153	3153	5153	”	”	”	5	"
0154	3154	5154	”	”	”	6	"
0155	3155	5155	”	”	”	7	"
0156	3156	5156	”	”	”	8	"
0157	3157	5157	”	”	”	9	"
0158	3158	5158	”	”	”	10	"
0159	3159	5159	”	”	”	11	"
0160	3160	5160	”	”	”	12 1/	"
0161	3161	5161	”	”	2	2	"
0162	3162	5162	”	”	”	3	"
0163	3163	5163	”	”	”	4	"
0164	3164	5164	”	”	”	5	"
0165	3165	5165	30	8	2	6	NS
	3166	5166	”	”	3	2	"
	3167	5167	”	”	”	3	"
	3168	5168	”	”	”	4	"
0169	3169	5169	”	1	1	2	S
0170	3170	5170	”	”	”	3	"
0171	3171	5171	"	"	"	4	"
0172	3172	5172	”	”	”	5	"
0173	3173	5173	”	”	”	6	"
0174	3174	5174	”	”	”	7	"
0175	3175	5175	”	”	”	8	"
0176	3176	5176	”	”	”	9	"
0177	3177	5177	”	”	”	10	"
0178	3178	5178	”	”	”	11	"
0179	3179	5179	"	"	"	12 1/	"
0180	3180	5180	"	"	2	2	"
0181	3181	5181	”	”	”	3	"
0182	3182	5182	”	”	”	4	"
0183	3183	5183	”	”	”	5	"
0184	3184	5184	”	”	”	6	"
	3185	5185	”	”	3	2	"
	3186	5186	”	”	”	3	"
	3187	5187	”	”	”	4	"
0188	3188	5188	”	”	4	2	"
0189	3189	5189	”	”	”	3	"
0190	3190	5190	”	”	6	2	"
0191	3191	5191	”	2	1	2	"
0192	3192	5192	”	”	”	3	"
0193	3193	5193	”	”	”	4	"
0194	3194	5194	”	”	”	5	"
0195	3195	5195	”	”	”	6	"
0196	3196	5196	”	”	”	7	"
0197	3197	5197	”	”	”	8	"
0198	3198	5198	”	”	”	9	"
0199	3199	5199	”	”	”	10	"

TABLE III. Switching characteristics and PIN's (M3786/4-) - Continued.

Dash Number			Angle of throw	No. of decks	Poles per decks	Position per pole	Switching characteristic (S or NS)
Construction: E Temp.-life characteristic: B Style: SR04-1	Construction: E Temp.-life characteristic: C Style: SR04-1	Construction: F Temp.-life characteristic: C Style: SR04-1					
0200	3200	5200	"	"	"	11	"
0201	3201	5201	”	”	”	12 1/	"
0202	3202	5202	”	”	2	2	"
0203	3203	5203	”	”	”	3	"
0204	3204	5204	”	”	”	4	"
0205	3205	5205	”	”	”	5	"
0206	3206	5206	30	2	2	6	S
	3207	5207	”	”	3	2	"
	3208	5208	”	”	”	3	"
	3209	5209	”	”	”	4	"
0210	3210	5210	”	”	4	2	"
0211	3211	5211	”	”	”	3	"
0212	3212	5212	”	”	6	2	"
0213	3213	5213	”	3	1	2	"
0214	3214	5214	"	"	"	3	"
0215	3215	5215	”	”	”	4	"
0216	3216	5216	”	”	”	5	"
0217	3217	5217	”	”	”	6	"
0218	3218	5218	”	”	”	7	"
0219	3219	5219	”	”	”	8	"
0220	3220	5220	”	”	”	9	"
0221	3221	5221	”	”	”	10	"
0222	3222	5222	”	”	”	11	"
0223	3223	5223	”	”	”	12 1/	"
0224	3224	5224	"	"	2	2	"
0225	3225	5225	"	"	"	3	"
0226	3226	5226	"	"	"	4	"
0227	3227	5227	”	”	”	5	"
0228	3228	5228	”	”	”	6	"
	3229	5229	”	”	3	2	"
	3230	5230	”	”	”	3	"
	3231	5231	”	”	”	4	"
0232	3232	5232	”	”	4	2	"
0233	3233	5233	”	”	”	3	"
0234	3234	5234	”	”	6	2	"
0235	3235	5235	”	4	1	2	"
0236	3236	5236	”	”	”	3	"
0237	3237	5237	”	”	”	4	"
0238	3238	5238	”	”	”	5	"
0239	3239	5239	”	”	”	6	"
0240	3240	5240	”	”	”	7	"
0241	3241	5241	”	”	”	8	"
0242	3242	5242	”	”	”	9	"
0243	3243	5243	”	”	”	10	"
0244	3244	5244	”	”	”	11	"
0245	3245	5245	”	”	”	12 1/	"
0246	3246	5246	”	”	2	2	"
0247	3247	5247	30	4	2	3	S
0248	3248	5248	”	”	”	4	"
0249	3249	5249	”	”	”	5	"
0250	3250	5250	”	"	"	6	"
	3251	5251	”	”	3	2	"
	3252	5252	”	”	”	3	"

TABLE III. Switching characteristics and PIN's (M3786/4-) - Continued.

Dash Number			Angle of throw	No. of decks	Poles per decks	Position per pole	Switching characteristic (S or NS)
Construction: E Temp.-life characteristic: B Style: SR04-1	Construction: E Temp.-life characteristic: C Style: SR04-1	Construction: F Temp.-life characteristic: C Style: SR04-1					
	3253	5253	"	"	"	4	"
0254	3254	5254	"	"	4	2	"
0255	3255	5255	"	"	"	3	"
0256	3256	5256	"	"	6	2	"
0257	3257	5257	"	5	1	2	"
0258	3258	5258	"	"	"	3	"
0259	3259	5259	"	"	"	4	"
0260	3260	5260	"	"	"	5	"
0261	3261	5261	"	"	"	6	"
0262	3262	5262	"	"	"	7	"
0263	3263	5263	"	"	"	8	"
0264	3264	5264	"	"	"	9	"
0265	3265	5265	"	"	"	10	"
0266	3266	5266	"	"	"	11	"
0267	3267	5267	"	"	"	12 1/	"
0268	3268	5268	"	"	2	2	"
0269	3269	5269	"	"	"	3	"
0270	3270	5270	"	"	"	4	"
0271	3271	5271	"	"	"	5	"
0272	3272	5272	"	"	"	6	"
0273	3273	5273	"	"	3	2	"
0274	3274	5274	"	"	"	3	"
0275	3275	5275	"	"	"	4	"
0276	3276	5276	"	"	4	2	"
0277	3277	5277	"	"	"	3	"
0278	3278	5278	"	6	1	2	"
0279	3279	5279	"	"	"	3	"
0280	3280	5280	"	"	"	4	"
0281	3281	5281	"	"	"	5	"
0282	3282	5282	"	"	"	6	"
0283	3283	5283	"	"	"	7	"
0284	3284	5284	"	"	"	8	"
0285	3285	5285	"	"	"	9	"
0286	3286	5286	"	"	"	10	"
0287	3287	5287	30	6	1	11	S
0288	3288	5288	"	"	"	12 1/	"
0289	3289	5289	"	"	2	2	"
0290	3290	5290	"	"	"	3	"
0291	3291	5291	"	"	"	4	"
0292	3292	5292	"	"	"	5	"
0293	3293	5293	"	"	"	6	"
	3294	5294	"	"	3	2	"
	3295	5295	"	"	"	3	"
	3296	5296	"	"	"	4	"
0297	3297	5297	"	"	4	2	"
0298	3298	5298	"	"	"	3	"
0299	3299	5299	"	7	1	2	"
0300	3300	5300	"	"	"	3	"
0301	3301	5301	"	"	"	4	"
0302	3302	5302	"	"	"	5	"
0303	3303	5303	"	"	"	6	"
0304	3304	5304	"	"	"	7	"

TABLE III. Switching characteristics and PIN's (M3786/4-) - Continued.

Dash Number			Angle of throw	No. of decks	Poles per decks	Position per pole	Switching characteristic (S or NS)
Construction: E Temp.-life characteristic: B Style: SR04-1	Construction: E Temp.-life characteristic: C Style: SR04-1	Construction: F Temp.-life characteristic: C Style: SR04-1					
0305	3305	5305	"	"	"	8	"
0306	3306	5306	"	"	"	9	"
0307	3307	5307	"	"	"	10	"
0308	3308	5308	"	"	"	11	"
0309	3309	5309	"	"	"	12 1/	"
0310	3310	5310	"	"	2	2	"
0311	3311	5311	"	"	"	3	"
0312	3312	5312	"	"	"	4	"
0313	3313	5313	"	"	"	5	"
0314	3314	5314	"	"	"	6	"
	3315	5315	"	"	3	2	"
	3316	5316	"	"	"	3	"
	3317	5317	"	"	"	4	"
0318	3318	5318	"	8	1	2	"
0319	3319	5319	"	"	"	3	"
0320	3320	5320	"	"	"	4	"
0321	3321	5321	"	"	"	5	"
0322	3322	5322	"	"	"	6	"
0323	3323	5323	"	"	"	7	"
0324	3324	5324	"	"	"	8	"
0325	3325	5325	"	"	"	9	"
0326	3326	5326	"	"	"	10	"
0327	3327	5327	"	"	"	11	"
0328	3328	5328	30	8	1	12 1/	S
0329	3329	5329	"	"	2	2	"
0330	3330	5330	"	"	"	3	"
0331	3331	5331	"	"	"	4	"
0332	3332	5332	"	"	"	5	"
0333	3333	5333	"	"	"	6	"
	3334	5334	"	"	3	2	"
	3335	5335	"	"	"	3	"
	3336	5336	"	"	"	4	"
0337	3337	5337	36	1	1	2	NS
0338	3338	5338	"	"	"	3	"
0339	3339	5339	"	"	"	4	"
0340	3340	5340	"	"	"	5	"
0341	3341	5341	"	"	"	6	"
0342	3342	5342	"	"	"	7	"
0343	3343	5343	"	"	"	8	"
0344	3344	5344	"	"	"	9	"
0345	3345	5345	"	"	"	10 1/	"
	3346	5346	"	"	2	2	"
	3347	5347	"	"	"	3	"
	3348	5348	"	"	"	4	"
	3349	5349	"	"	"	5	"
0350	3350	5350	"	2	1	2	"
0351	3351	5351	"	"	"	3	"
0352	3352	5352	"	"	"	4	"
0353	3353	5353	"	"	"	5	"
0354	3354	5354	"	"	"	6	"
0355	3355	5355	"	"	"	7	"
0356	3356	5356	"	"	"	8	"
0357	3357	5357	"	"	"	9	"

TABLE III. Switching characteristics and PIN's (M3786/4-) - Continued.

Dash Number			Angle of throw	No. of decks	Poles per decks	Position per pole	Switching characteristic (S or NS)
Construction: E Temp.-life characteristic: B Style: SR04-1	Construction: E Temp.-life characteristic: C Style: SR04-1	Construction: F Temp.-life characteristic: C Style: SR04-1					
0358	3358	5358	"	"	"	10 1/	"
	3359	5359	"	"	2	2	"
	3360	5360	"	"	"	3	"
	3361	5361	"	"	"	4	"
	3362	5362	"	"	"	5	"
0363	3363	5363	"	3	1	2	"
0364	3364	5364	"	"	"	3	"
0365	3365	5365	"	"	"	4	"
0366	3366	5366	"	"	"	5	"
0367	3367	5367	"	"	"	6	"
0368	3368	5368	36	3	1	7	NS
0369	3369	5369	"	"	"	8	"
0370	3370	5370	"	"	"	9	"
0371	3371	5371	"	"	"	10 1/	"
	3372	5372	"	"	2	2	"
	3373	5373	"	"	"	3	"
	3374	5374	"	"	"	4	"
	3375	5375	"	"	"	5	"
0376	3376	5376	"	4	1	2	"
0377	3377	5377	"	"	"	3	"
0378	3378	5378	"	"	"	4	"
0379	3379	5379	"	"	"	5	"
0380	3380	5380	"	"	"	6	"
0381	3381	5381	"	"	"	7	"
0382	3382	5382	"	"	"	8	"
0383	3383	5383	"	"	"	9	"
0384	3384	5384	"	"	"	10 1/	"
	3385	5385	"	"	2	2	"
	3386	5386	"	"	"	3	"
	3387	5387	"	"	"	4	"
	3388	5388	"	"	"	5	"
0389	3389	5389	"	5	1	2	"
0390	3390	5390	"	"	"	3	"
0391	3391	5391	"	"	"	4	"
0392	3392	5392	"	"	"	5	"
0393	3393	5393	"	"	"	6	"
0394	3394	5394	"	"	"	7	"
0395	3395	5395	"	"	"	8	"
0396	3396	5396	"	"	"	9	"
0397	3397	5397	"	"	"	10 1/	"
	3398	5398	"	"	2	2	"
	3399	5399	"	"	"	3	"
	3400	5400	"	"	"	4	"
0401	3401	5401	"	"	"	5	"
0402	3402	5402	"	6	1	2	"
0403	3403	5403	"	"	"	3	"
0404	3404	5404	"	"	"	4	"
0405	3405	5405	"	"	"	5	"
0406	3406	5406	"	"	"	6	"
0407	3407	5407	"	"	"	7	"
0408	3408	5408	"	"	"	8	"
0409	3409	5409	36	6	1	9	NS

TABLE III. Switching characteristics and PIN's (M3786/4-) - Continued.

Dash Number			Angle of throw	No. of decks	Poles per decks	Position per pole	Switching characteristic (S or NS)
Construction: E Temp.-life characteristic: B Style: SR04-1	Construction: E Temp.-life characteristic: C Style: SR04-1	Construction: F Temp.-life characteristic: C Style: SR04-1					
0410	3410	5410	”	”	”	10 1/	"
	3411	5411	”	”	2	2	"
	3412	5412	”	”	”	3	"
	3413	5413	”	”	”	4	"
	3414	5414	”	”	”	5	"
0415	3415	5415	”	7	1	2	"
0416	3416	5416	”	”	”	3	"
0417	3417	5417	”	”	”	4	"
0418	3418	5418	”	”	”	5	"
0419	3419	5419	”	”	”	6	"
0420	3420	5420	”	”	”	7	"
0421	3421	5421	”	”	”	8	"
0422	3422	5422	”	”	”	9	"
0423	3423	5423	”	”	”	10 1/	"
	3424	5424	”	”	2	2	"
	3425	5425	”	”	”	3	"
	3426	5426	”	”	”	4	"
	3427	5427	"	"	"	5	"
0428	3428	5428	”	8	1	2	"
0429	3429	5429	”	”	”	3	"
0430	3430	5430	”	”	”	4	"
0431	3431	5431	”	”	”	5	"
0432	3432	5432	”	”	”	6	"
0433	3433	5433	”	”	”	7	"
0434	3434	5434	”	”	”	8	"
0435	3435	5435	”	”	”	9	"
0436	3436	5436	”	”	”	10 1/	"
	3437	5437	”	”	2	2	"
	3438	5438	”	”	”	3	"
	3439	5439	”	”	”	4	"
	3440	5440	”	”	”	5	"
0441	3441	5441	”	1	1	2	S
0442	3442	5442	”	”	”	3	"
0443	3443	5443	”	"	"	4	"
0444	3444	5444	”	”	”	5	"
0445	3445	5445	”	”	”	6	"
0446	3446	5446	"	"	"	7	"
0447	3447	5447	”	”	”	8	"
0448	3448	5448	”	”	”	9	"
0449	3449	5449	”	”	”	10 1/	"
	3450	5450	36	1	2	2	NS
	3451	5451	”	”	”	3	"
	3452	5452	"	"	"	4	"
	3453	5453	"	"	"	5	"
0454	3454	5454	”	2	1	2	"
0455	3455	5455	”	”	”	3	"
0456	3456	5456	”	”	”	4	"
0457	3457	5457	”	”	”	5	"
0458	3458	5458	”	”	”	6	"
0459	3459	5459	”	”	”	7	"
0460	3460	5460	”	”	”	8	"
0461	3461	5461	”	”	”	9	"
0462	3462	5462	”	”	”	10 1/	"

TABLE III. Switching characteristics and PIN's (M3786/4-) - Continued.

Dash Number			Angle of throw	No. of decks	Poles per decks	Position per pole	Switching characteristic (S or NS)
Construction: E Temp.-life characteristic: B Style: SR04-1	Construction: E Temp.-life characteristic: C Style: SR04-1	Construction: F Temp.-life characteristic: C Style: SR04-1					
	3463	5463	"	"	2	2	"
	3464	5464	"	"	"	3	"
	3465	5465	"	"	"	4	"
	3466	5466	"	"	"	5	"
0467	3467	5467	"	3	1	2	"
0468	3468	5468	"	"	"	3	"
0469	3469	5469	"	"	"	4	"
0470	3470	5470	"	"	"	5	S
0471	3471	5471	"	"	"	6	"
0472	3472	5472	"	"	"	7	"
0473	3473	5473	"	"	"	8	"
0474	3474	5474	"	"	"	9	"
0475	3475	5475	"	"	"	10 1/	"
	3476	5476	"	"	2	2	"
	3477	5477	"	"	"	3	"
	3478	5478	"	"	"	4	"
	3479	5479	"	"	"	5	"
0480	3480	5480	"	4	1	2	"
0481	3481	5481	"	"	"	3	"
0482	3482	5482	"	"	"	4	"
0483	3483	5483	"	"	"	5	"
0484	3484	5484	"	"	"	6	"
0485	3485	5485	"	"	"	7	"
0486	3486	5486	"	"	"	8	"
0487	3487	5487	"	"	"	9	"
0488	3488	5488	"	"	"	10 1/	"
	3489	5489	"	"	"	2	"
	3490	5490	"	"	"	3	"
	3491	5491	36	4	1	4	S
	3492	5492	"	"	"	5	"
0493	3493	5493	"	5	"	2	"
0494	3494	5494	"	"	"	3	"
0495	3495	5495	"	"	"	4	"
0496	3496	5496	"	"	"	5	"
0497	3497	5497	"	"	"	6	"
0498	3498	5498	"	"	"	7	"
0499	3499	5499	"	"	"	8	"
0500	3500	5500	"	"	"	9	"
0501	3501	5501	"	"	"	10 1/	"
0502	3502	5502	"	"	2	2	"
0503	3503	5503	"	"	"	3	"
0504	3504	5504	"	"	"	4	"
0505	3505	5505	"	"	"	5	"
0506	3506	5506	"	6	1	2	"
0507	3507	5507	"	"	"	3	"
0508	3508	5508	"	"	"	4	"
0509	3509	5509	"	"	"	5	"
0510	3510	5510	"	"	"	6	"
0511	3511	5511	"	"	"	7	"
0512	3512	5512	"	"	"	8	"
0513	3513	5513	"	"	"	8	"
0514	3514	5514	"	"	"	10 1/	"
	3515	5515	"	"	2	2	"

TABLE III. Switching characteristics and PIN's (M3786/4-) - Continued.

Dash Number			Angle of throw	No. of decks	Poles per decks	Position per pole	Switching characteristic (S or NS)
Construction: E Temp.-life characteristic: B Style: SR04-1	Construction: E Temp.-life characteristic: C Style: SR04-1	Construction: F Temp.-life characteristic: C Style: SR04-1					
	3516	5516	”	”	”	3	"
	3517	5517	”	”	”	4	"
	3518	5518	”	”	”	5	"
0519	3519	5519	”	7	1	2	"
0520	3520	5520	”	”	”	3	"
0521	3521	5521	”	”	”	4	"
0522	3522	5522	”	”	”	5	"
0523	3523	5523	”	”	”	6	"
0524	3524	5524	”	”	”	7	"
0525	3525	5525	”	”	”	8	"
0526	3526	5526	”	”	”	9	"
0527	3527	5527	”	”	”	10 1/	"
	3528	5528	”	”	2	2	"
	3529	5529	”	”	”	3	"
	3530	5530	”	”	”	4	"
	3531	5531	”	”	”	5	"
0532	3532	5532	36	8	1	2	S
0533	3533	5533	”	”	”	3	"
0534	3534	5534	”	”	”	4	"
0535	3535	5535	”	”	”	5	"
0536	3536	5536	"	"	"	6	"
0537	3537	5537	”	”	”	7	"
0538	3538	5538	”	”	”	8	"
0539	3539	5539	”	”	”	9	"
0540	3540	5540	”	”	”	10 1/	"
	3541	5541	”	”	2	2	"
	3542	5542	”	”	”	3	"
	3543	5543	"	"	"	4	"
	3544	5544	"	"	"	5	"
0545	3545	5545	30	1	1	12	NS
0546	3546	5546	”	2	”	12	"
0547	3547	5547	”	3	”	12	"
0548	3548	5548	”	4	”	12	"
0549	3549	5549	”	5	”	12	"
0550	3550	5550	”	6	”	12	"
0551	3551	5551	”	7	”	12	"
0552	3552	5552	”	8	”	12	"
0553	3553	5553	”	9	”	2	"
0554	3554	5554	”	9	”	12 1/	"
0555	3555	5555	”	10	”	3	"
0556	3556	5556	"	10	"	6	"
0557	3557	5557	”	1	”	12	S
0558	3558	5558	”	2	”	12	"
0559	3559	5559	”	3	”	12	"
0560	3560	5560	”	4	”	12	"
0561	3561	5561	”	5	”	12	"
0562	3562	5562	”	6	”	12	"
0563	3563	5563	”	7	”	12	"
0564	3564	5564	”	8	”	12	"
0565	3565	5565	36	1	”	10	NS
0566	3566	5566	”	2	”	10	"
0567	3567	5567	”	3	”	10	"
0568	3568	5568	”	4	”	10	"

TABLE III. Switching characteristics and PIN's (M3786/4-) - Continued.

Dash Number			Angle of throw	No. of decks	Poles per decks	Position per pole	Switching characteristic (S or NS)
Construction: E Temp.-life characteristic: B Style: SR04-1	Construction: E Temp.-life characteristic: C Style: SR04-1	Construction: F Temp.-life characteristic: C Style: SR04-1					
0569	3569	5569	”	5	”	10	"
0570	3570	5570	”	6	”	10	"
0571	3571	5571	”	7	”	10	"
0572	3572	5572	”	8	”	10	"
0573	3573	5573	36	9	1	10 1/	NS
0574	3574	5574	”	9	”	6	"
0575	3575	5575	”	9	”	8	"
0576	3576	5576	”	10	”	3	"
0577	3577	5577	”	10	”	6	"
0578	3578	5578	”	10	”	7	"
0579	3579	5579	”	10	”	10	"
0580	3580	5580	”	10	”	10 1/	"
0581	3581	5581	”	1	”	10	S
0582	3582	5582	”	2	”	10	"
0583	3583	5583	”	3	”	10	"
0584	3584	5584	”	4	”	10	"
0585	3585	5585	”	5	”	10	"
0586	3586	5586	”	6	”	10	"
0587	3587	5587	”	7	”	10	"
0588	3588	5588	"	8	"	10	"

Dash Number	Angle of throw	No. of decks	Poles per decks	Position per pole	Switching characteristic (S or NS)
Construction: E Temp.-life characteristic: B Style: SR04-1					
0589	30	1	3	2	NS
0590	”	”	”	3	"
0591	”	”	”	4	"
0592	”	2	”	2	"
0593	”	”	”	3	"
0594	”	”	”	4	"
0595	”	3	”	2	"
0596	”	”	”	3	"
0597	”	”	”	4	"
0598	”	4	”	2	"
0599	”	”	”	3	"
0600	”	”	”	4	"
0601	”	5	”	2	"
0602	”	”	”	3	"
0603	”	”	”	4	"
0604	”	6	”	2	"
0605	”	”	”	3	"
0606	”	”	”	4	"
0607	”	7	”	2	"
0608	”	”	”	3	"
0609	”	”	”	4	"
0610	”	8	”	2	"
0611	”	”	”	3	"
0612	”	”	”	4	"
0613	”	1	”	2	S

TABLE III. Switching characteristics and PIN's (M3786/4-) - Continued.

Dash Number Construction: E Temp.-life characteristic: B Style: SR04-1	Angle of throw	No. of decks	Poles per decks	Position per pole	Switching characteristic (S or NS)
0614	”	”	”	3	"
0615	”	”	”	4	"
0616	”	2	”	2	"
0617	”	”	”	3	"
0618	”	”	”	4	"
0619	”	3	”	2	"
0620	”	”	”	3	"
0621	”	”	”	4	"
0622	”	4	”	2	"
0623	”	”	”	3	"
0624	”	”	”	4	"
0625	”	5	”	2	"
0626	”	”	”	3	"
0627	”	”	”	4	"
0628	”	6	”	2	"
0629	30	6	3	3	S
0630	”	”	”	4	"
0631	"	"	"	2	"
0632	”	”	”	3	"
0633	”	”	”	4	"
0634	”	8	”	2	"
0635	”	”	”	3	"
0636	”	”	”	4	"
0637	36	1	2	2	NS
0638	”	”	”	3	"
0639	”	”	”	4	"
0640	”	”	”	5	"
0641	”	2	”	2	"
0642	”	”	”	3	"
0643	”	”	”	4	"
0644	”	”	”	5	"
0645	”	3	”	2	"
0646	”	”	”	3	"
0647	”	”	”	4	"
0648	”	”	”	5	"
0649	”	4	”	2	"
0650	”	”	”	3	"
0651	”	”	”	4	"
0652	”	”	”	5	"
0653	”	5	”	2	"
0654	”	”	”	3	"
0655	”	”	”	4	"
0656	”	”	”	5	"
0657	”	6	”	2	"
0658	”	”	”	3	"
0659	”	”	”	4	"
0660	”	”	”	5	“
0661	”	7	”	2	“
0662	”	”	”	3	“
0663	”	”	”	4	“
0664	”	”	”	5	“
0665	”	8	”	2	“
0666	”	”	”	3	“

TABLE III. Switching characteristics and PIN's (M3786/4-) - Continued.

Dash Number Construction: E Temp.-life characteristic: B Style: SR04-1	Angle of throw	No. of decks	Poles per decks	Position per pole	Switching characteristic (S or NS)
0667	”	”	”	4	“
0668	”	”	”	5	“
0669	”	1	”	2	S
0670	36	1	2	3	S
0671	”	”	”	4	"
0672	”	”	”	5	"
0673	”	2	”	2	"
0674	”	”	”	3	"
0675	”	”	”	4	"
0676	”	”	”	5	"
0677	”	3	”	2	"
0678	”	”	”	3	"
0679	”	”	”	4	"
0680	”	”	”	5	"
0681	”	4	”	2	"
0682	”	”	”	3	"
0683	”	”	”	4	"
0684	”	”	”	5	"
0685	”	5	”	2	"
0686	”	”	”	3	"
0687	”	”	”	4	"
0688	”	”	”	5	"
0689	”	6	”	2	"
0690	”	”	”	3	"
0691	”	”	”	4	NS
0692	”	”	”	5	"
0693	”	7	”	2	"
0694	”	”	”	3	"
0695	”	”	”	4	"
0696	”	”	”	5	"
0697	”	8	”	2	"
0698	”	”	”	3	"
0699	”	”	”	4	"
0700	"	"	"	5	"

Dash Number			Angle of throw	No. of decks	Poles per decks	Position per pole	Switching characteristic (S or NS)
Construction: E Temp.-life characteristic: B Style: SR04-1	Construction: E Temp.-life characteristic: C Style: SR04-1	Construction: F Temp.-life characteristic: C Style: SR04-1					
0701	3701	5701	30	9	1	3	NS
0702	3702	5702	"	"	"	4	"
0703	3703	5703	"	"	"	5	"
0704	3704	5704	"	"	"	6	"
0705	3705	5705	"	"	"	7	"
0706	3706	5706	"	"	"	8	"
0707	3707	5707	"	"	"	9	"
0708	3708	5708	"	"	"	10	"
0709	3709	5709	"	"	"	11	"
0710	3710	5710	"	"	"	12	"
0711	3711	5711	"	"	"	2	S
0712	3712	5712	"	"	"	3	"

TABLE III. Switching characteristics and PIN's (M3786/4-) - Continued.

Dash Number			Angle of throw	No. of decks	Poles per decks	Position per pole	Switching characteristic (S or NS)
Construction: E Temp.-life characteristic: B Style: SR04-1	Construction: E Temp.-life characteristic: C Style: SR04-1	Construction: F Temp.-life characteristic: C Style: SR04-1					
0713	3713	5713	"	"	"	4	"
0714	3714	5714	"	"	"	5	"
0715	3715	5715	"	"	"	6	"
0716	3716	5716	"	"	"	7	"
0717	3717	5717	"	"	"	8	"
0718	3718	5718	"	"	"	9	"
0719	3719	5719	"	"	"	10	"
0720	3720	5720	"	"	"	11	"
0721	3721	5721	"	"	"	12 1/	"
0722	3722	5722	"	"	"	12	"
0723	3723	5723	"	10	"	2	NS
0724	3724	5724	"	"	"	4	"
0725	3725	5725	"	"	"	5	"
0726	3726	5726	"	"	"	7	"
0727	3727	5727	"	"	"	8	"
0728	3728	5728	"	"	"	9	"
0729	3729	5729	"	"	"	10	"
0730	3730	5730	"	"	"	11	"
0731	3731	5731	"	"	"	12 1/	"
0732	3732	5732	"	"	"	12	"
0733	3733	5733	"	"	"	2	S
0734	3734	5734	"	"	"	3	"
0735	3735	5735	"	"	"	4	"
0736	3736	5736	"	"	"	5	"
0737	3737	5737	"	"	"	6	"
0738	3738	5738	"	"	"	7	"
0739	3739	5739	"	"	"	8	"
0740	3740	5740	30	10	1	9	S
0741	3741	5741	"	"	"	10	"
0742	3742	5742	"	"	"	11	"
0743	3743	5743	"	"	"	12 1/	"
0744	3744	5744	"	"	"	12	"
0745	3745	5745	"	11	"	2	NS
0746	3746	5746	"	"	"	3	"
0747	3747	5747	"	"	"	4	"
0748	3748	5748	"	"	"	5	"
0749	3749	5749	"	"	"	6	"
0750	3750	5750	"	"	"	7	"
0751	3751	5751	"	"	"	8	"
0752	3752	5752	"	"	"	9	"
0753	3753	5753	"	"	"	10	"
0754	3754	5754	"	"	"	11	"
0755	3755	5755	"	"	"	12 1/	"
0756	3756	5756	"	"	"	12	"
0757	3757	5757	"	"	"	2	S
0758	3758	5758	"	"	"	3	"
0759	3759	5759	"	"	"	4	"
0760	3760	5760	"	"	"	5	"
0761	3761	5761	"	"	"	6	"
0762	3762	5762	"	"	"	7	"
0763	3763	5763	"	"	"	8	"
0764	3764	5764	"	"	"	9	"
0765	3765	5765	"	"	"	10	"

TABLE III. Switching characteristics and PIN's (M3786/4-) - Continued.

Dash Number			Angle of throw	No. of decks	Poles per decks	Position per pole	Switching characteristic (S or NS)
Construction: E Temp.-life characteristic: B Style: SR04-1	Construction: E Temp.-life characteristic: C Style: SR04-1	Construction: F Temp.-life characteristic: C Style: SR04-1					
0766	3766	5766	"	"	"	11	"
0767	3767	5767	"	"	"	12 1/	"
0768	3768	5768	"	"	"	12	"
0769	3769	5769	"	12	"	2	NS
0770	3770	5770	"	"	"	3	"
0771	3771	5771	"	"	"	4	"
0772	3772	5772	"	"	"	5	"
0773	3773	5773	"	"	"	6	"
0774	3774	5774	"	"	"	7	"
0775	3775	5775	"	"	"	8	"
0776	3776	5776	"	"	"	9	"
0777	3777	5777	"	"	"	10	"
0778	3778	5778	"	"	"	11	"
0779	3779	5779	"	"	"	12 1/	"
0780	3780	5780	"	"	"	12	"
0781	3781	5781	30	12	1	2	S
0782	3782	5782	"	"	"	3	"
0783	3783	5783	"	"	"	4	"
0784	3784	5784	"	"	"	5	"
0785	3785	5785	"	"	"	6	"
0786	3786	5786	"	"	"	7	"
0787	3787	5787	"	"	"	8	"
0788	3788	5788	"	"	"	9	"
0789	3789	5789	"	"	"	10	"
0790	3790	5790	"	"	"	11	"
0791	3791	5791	"	"	"	12 1/	"
0792	3792	5792	"	"	"	12	"
0793	3793	5793	36	9	"	2	NS
0794	3794	5794	"	"	"	3	"
0795	3795	5795	"	"	"	4	"
0796	3796	5796	"	"	"	5	"
0797	3797	5797	"	"	"	7	"
0798	3798	5798	"	"	"	9	"
0799	3799	5799	"	"	"	10	"
0800	3800	5800	"	"	"	2	S
0801	3801	5801	36	9	1	3	"
0802	3802	5802	"	"	"	4	"
0803	3803	5803	"	"	"	5	"
0804	3804	5804	"	"	"	6	"
0805	3805	5805	"	"	"	7	"
0806	3806	5806	"	"	"	8	"
0807	3807	5807	"	"	"	9	"
0808	3808	5808	"	"	"	10 1/	"
0809	3809	5809	"	"	"	10	"
0810	3810	5810	"	10	"	2	NS
0811	3811	5811	"	"	"	4	"
0812	3812	5812	"	"	"	5	"
0813	3813	5813	"	"	"	8	"
0814	3814	5814	"	"	"	9	"
0815	3815	5815	"	"	"	2	S
0816	3816	5816	"	"	"	3	"
0817	3817	5817	"	"	"	4	"
0818	3818	5818	"	"	"	5	"

TABLE III. Switching characteristics and PIN's (M3786/4-) - Continued.

Dash Number			Angle of throw	No. of decks	Poles per decks	Position per pole	Switching characteristic (S or NS)
Construction: E Temp.-life characteristic: B Style: SR04-1	Construction: E Temp.-life characteristic: C Style: SR04-1	Construction: F Temp.-life characteristic: C Style: SR04-1					
0819	3819	5819	"	"	"	6	"
0820	3820	5820	"	"	"	7	"
0821	3821	5821	"	"	"	8	"
0822	3822	5822	36	10	1	9	S
0823	3823	5823	"	"	"	10 1/	"
0824	3824	5824	"	"	"	10	"
0825	3825	5825	"	11	"	2	NS
0826	3826	5826	"	"	"	3	"
0827	3827	5827	"	"	"	4	"
0828	3828	5828	"	"	"	5	"
0829	3829	5829	"	"	"	6	"
0830	3830	5830	"	"	"	7	"
0831	3831	5831	"	"	"	8	"
0832	3832	5832	"	"	"	9	"
0833	3833	5833	"	"	"	10 1/	"
0834	3834	5834	"	"	"	10	"
0835	3835	5835	"	"	"	2	S
0836	3836	5836	"	"	"	3	"
0837	3837	5837	"	"	"	4	"
0838	3838	5838	"	"	"	5	"
0839	3839	5839	"	"	"	6	"
0840	3840	5840	"	"	"	7	"
0841	3841	5841	"	"	"	8	"
0842	3842	5842	"	"	"	9	"
0843	3843	5843	"	"	"	10 1/	"
0844	3844	5844	"	"	"	10	"
0845	3845	5845	"	12	"	2	NS
0846	3846	5846	"	"	"	3	"
0847	3847	5847	"	"	"	4	"
0848	3848	5848	"	"	"	5	"
0849	3849	5849	"	"	"	6	"
0850	3850	5850	"	"	"	7	"
0851	3851	5851	"	"	"	8	"
0852	3852	5852	"	"	"	9	"
0853	3853	5853	"	"	"	10 1/	"
0854	3854	5854	"	"	"	10	"
0855	3855	5855	"	"	"	2	S
0856	3856	5856	"	"	"	3	"
0857	3857	5857	"	"	"	4	"
0858	3858	5858	"	"	"	5	"
0859	3859	5859	"	"	"	6	"
0860	3860	5860	"	"	"	7	"
0861	3861	5861	"	"	"	8	"
0862	3862	5862	"	"	"	9	"
0863	3863	5863	36	12	1	10 1/	S
0864	3864	5864	"	"	"	10	"
0865	3865	5865	45	1	"	2	NS
0866	3866	5866	"	"	"	3	"
0867	3867	5867	"	"	"	4	"
0868	3868	5868	"	"	"	5	"
0869	3869	5869	"	"	"	6	"
0870	3870	5870	"	"	"	7	"
0871	3871	5871	"	"	"	8 1/	"

TABLE III. Switching characteristics and PIN's (M3786/4-) - Continued.

Dash Number			Angle of throw	No. of decks	Poles per decks	Position per pole	Switching characteristic (S or NS)
Construction: E Temp.-life characteristic: B Style: SR04-1	Construction: E Temp.-life characteristic: C Style: SR04-1	Construction: F Temp.-life characteristic: C Style: SR04-1					
0872	3872	5872	"	"	"	8	"
0873	3873	5873	"	2	"	2	"
0874	3874	5874	"	"	"	3	"
0875	3875	5875	"	"	"	4	"
0876	3876	5876	"	"	"	5	"
0877	3877	5877	"	"	"	6	"
0878	3878	5878	"	"	"	7	"
0879	3879	5879	"	"	"	8 1/	"
0880	3880	5880	"	"	"	8	"
0881	3881	5881	"	3	"	2	"
0882	3882	5882	"	"	"	3	"
0883	3883	5883	"	"	"	4	"
0884	3884	5884	"	"	"	5	"
0885	3885	5885	"	"	"	6	"
0886	3886	5886	"	"	"	7	"
0887	3887	5887	"	"	"	8 1/	"
0888	3888	5888	"	"	"	8	"
0889	3889	5889	"	4	"	2	"
0890	3890	5890	"	"	"	3	"
0891	3891	5891	"	"	"	4	"
0892	3892	5892	"	"	"	5	"
0893	3893	5893	"	"	"	6	"
0894	3894	5894	"	"	"	7	"
0895	3895	5895	"	"	"	8 1/	"
0896	3896	5896	"	"	"	8	"
0897	3897	5897	"	5	"	2	"
0898	3898	5898	"	"	"	3	"
0899	3899	5899	"	"	"	4	"
0900	3900	5900	"	"	"	5	"
0901	3901	5901	"	"	"	6	"
0902	3902	5902	"	"	"	7	"
0903	3903	5903	"	"	"	8 1/	"
0904	3904	5904	45	5	1	8	NS
0905	3905	5905	"	6	"	2	"
0906	3906	5906	"	"	"	3	"
0907	3907	5907	"	"	"	4	"
0908	3908	5908	"	"	"	5	"
0909	3909	5909	"	"	"	6	"
0910	3910	5910	"	"	"	7	"
0911	3911	5911	"	"	"	8 1/	"
0912	3912	5912	"	"	"	8	"
0913	3913	5913	"	7	"	2	"
0914	3914	5914	"	"	"	3	"
0915	3915	5915	"	"	"	4	"
0916	3916	5916	"	"	"	5	"
0917	3917	5917	"	"	"	6	"
0918	3918	5918	"	"	"	7	"
0919	3919	5919	"	"	"	8 1/	"
0920	3920	5920	"	"	"	8	"
0921	3921	5921	"	8	"	2	"
0922	3922	5922	"	"	"	3	"
0923	3923	5923	"	"	"	4	"
0924	3924	5924	"	"	"	5	"

TABLE III. Switching characteristics and PIN's (M3786/4-) - Continued.

Dash Number			Angle of throw	No. of decks	Poles per decks	Position per pole	Switching characteristic (S or NS)
Construction: E Temp.-life characteristic: B Style: SR04-1	Construction: E Temp.-life characteristic: C Style: SR04-1	Construction: F Temp.-life characteristic: C Style: SR04-1					
0925	3925	5925	"	"	"	6	"
0926	3926	5926	"	"	"	7	"
0927	3927	5927	"	"	"	8 1/	"
0928	3928	5928	"	"	"	8	"
0929	3929	5929	"	9	"	2	"
0930	3930	5930	"	"	"	3	"
0931	3931	5931	"	"	"	4	"
0932	3932	5932	"	"	"	5	"
0933	3933	5933	"	"	"	6	"
0934	3934	5934	"	"	"	7	"
0935	3935	5935	"	"	"	8 1/	"
0936	3936	5936	"	"	"	8	"
0937	3937	5937	"	"	"	2	"
0938	3938	5938	"	10	"	3	"
0939	3939	5939	"	"	"	4	"
0940	3940	5940	"	"	"	5	"
0941	3941	5941	"	"	"	6	"
0942	3942	5942	"	"	"	7	"
0943	3943	5943	"	"	"	8 1/	"
0944	3944	5944	"	"	"	8	"
0945	3945	5945	45	1	1	2	S
0946	3946	5946	"	"	"	3	"
0947	3947	5947	"	"	"	4	"
0948	3948	5948	"	"	"	5	"
0949	3949	5949	"	"	"	6	"
0950	3950	5950	"	"	"	7	"
0951	3951	5951	"	"	"	8 1/	"
0952	3952	5952	"	"	"	8	"
0953	3953	5953	"	2	"	2	"
0954	3954	5954	"	"	"	3	"
0955	3955	5955	"	"	"	4	"
0956	3956	5956	"	"	"	5	"
0957	3957	5957	"	"	"	6	"
0958	3958	5958	"	"	"	7	"
0959	3959	5959	"	"	"	8 1/	"
0960	3960	5960	"	"	"	8	"
0961	3961	5961	"	3	"	2	"
0962	3962	5962	"	"	"	3	"
0963	3963	5963	"	"	"	4	"
0964	3964	5964	"	"	"	5	"
0965	3965	5965	"	"	"	6	"
0966	3966	5966	"	"	"	7	"
0967	3967	5967	"	"	"	8 1/	"
0968	3968	5968	"	"	"	8	"
0969	3969	5969	"	4	"	2	"
0970	3970	5970	"	"	"	3	"
0971	3971	5971	"	"	"	4	"
0972	3972	5972	"	"	"	5	"
0973	3973	5973	"	"	"	6	"
0974	3974	5974	"	"	"	7	"
0975	3975	5975	"	"	"	8 1/	"
0976	3976	5976	"	"	"	8	"
0977	3977	5977	"	5	"	2	"

TABLE III. Switching characteristics and PIN's (M3786/4-) - Continued.

Dash Number			Angle of throw	No. of decks	Poles per decks	Position per pole	Switching characteristic (S or NS)
Construction: E Temp.-life characteristic: B Style: SR04-1	Construction: E Temp.-life characteristic: C Style: SR04-1	Construction: F Temp.-life characteristic: C Style: SR04-1					
0978	3978	5978	"	"	"	3	"
0979	3979	5979	"	"	"	4	"
0980	3980	5980	"	"	"	5	"
0981	3981	5981	"	"	"	6	"
0982	3982	5982	"	"	"	7	"
0983	3983	5983	"	"	"	8 1/	"
0984	3984	5984	"	"	"	8	"
0985	3985	5985	"	6	"	2	"
0986	3986	5986	45	6	1	3	S
0987	3987	5987	"	"	"	4	"
0988	3988	5988	"	"	"	5	"
0989	3989	5989	"	"	"	6	"
0990	3990	5990	"	"	"	7	"
0991	3991	5991	"	"	"	8 1/	"
0992	3992	5992	"	"	"	8	"
0993	3993	5993	"	7	"	2	"
0994	3994	5994	"	"	"	3	"
0995	3995	5995	"	"	"	4	"
0996	3996	5996	"	"	"	5	"
0997	3997	5997	"	"	"	6	"
0998	3998	5998	"	"	"	7	"
0999	3999	5999	"	"	"	8 1/	"
1000	4000	6000	"	"	"	8	"
1001	4001	6001	"	8	"	2	"
1002	4002	6002	"	"	"	3	"
1003	4003	6003	"	"	"	4	"
1004	4004	6004	"	"	"	5	"
1005	4005	6005	"	"	"	6	"
1006	4006	6006	"	"	"	7	"
1007	4007	6007	"	"	"	8 1/	"
1008	4008	6008	"	"	"	8	"
1009	4009	6009	"	9	"	2	"
1010	4010	6010	"	"	"	3	"
1011	4011	6011	"	"	"	4	"
1012	4012	6012	"	"	"	5	"
1013	4013	6013	"	"	"	6	"
1014	4014	6014	"	"	"	7	"
1015	4015	6015	"	"	"	8 1/	"
1016	4016	6016	"	"	"	8	"
1017	4017	6017	"	10	"	2	"
1018	4018	6018	"	"	"	3	"
1019	4019	6019	"	"	"	4	"
1020	4020	6020	"	"	"	5	"
1021	4021	6021	"	"	"	6	"
1022	4022	6022	"	"	"	7	"
1023	4023	6023	"	"	"	8 1/	"
1024	4024	6024	"	"	"	8	"
1025	4025	6025	60	1	"	2	NS
1026	4026	6026	"	"	"	3	"
1027	4027	6027	60	1	1	4	NS
1028	4028	6028	"	"	"	5	"
1029	4029	6029	"	"	"	6 1/	"
1030	4030	6030	"	"	"	6	"

TABLE III. Switching characteristics and PIN's (M3786/4-) - Continued.

Dash Number			Angle of throw	No. of decks	Poles per decks	Position per pole	Switching characteristic (S or NS)
Construction: E Temp.-life characteristic: B Style: SR04-1	Construction: E Temp.-life characteristic: C Style: SR04-1	Construction: F Temp.-life characteristic: C Style: SR04-1					
1031	4031	6031	"	2	"	2	"
1032	4032	6032	"	"	"	3	"
1033	4033	6033	"	"	"	4	"
1034	4034	6034	"	"	"	5	"
1035	4035	6035	"	"	"	6 1/	"
1036	4036	6036	"	"	"	6	"
1037	4037	6037	"	3	"	2	"
1038	4038	6038	"	"	"	3	"
1039	4039	6039	"	"	"	4	"
1040	4040	6040	"	"	"	5	"
1041	4041	6041	"	"	"	6 1/	"
1042	4042	6042	"	"	"	6	"
1043	4043	6043	"	4	"	2	"
1044	4044	6044	"	"	"	3	"
1045	4045	6045	"	"	"	4	"
1046	4046	6046	"	"	"	5	"
1047	4047	6047	"	"	"	6 1/	"
1048	4048	6048	"	"	"	6	"
1049	4049	6049	"	5	"	2	"
1050	4050	6050	"	"	"	3	"
1051	4051	6051	"	"	"	4	"
1052	4052	6052	"	"	"	5	"
1053	4053	6053	"	"	"	6 1/	"
1054	4054	6054	"	"	"	6	"
1055	4055	6055	"	6	"	2	"
1056	4056	6056	"	"	"	3	"
1057	4057	6057	"	"	"	4	"
1058	4058	6058	"	"	"	5	"
1059	4059	6059	"	"	"	6 1/	"
1060	4060	6060	"	"	"	6	"
1061	4061	6061	"	7	"	2	"
1062	4062	6062	"	"	"	3	"
1063	4063	6063	"	"	"	4	"
1064	4064	6064	"	"	"	5	"
1065	4065	6065	"	"	"	6 1/	"
1066	4066	6066	"	"	"	6	"
1067	4067	6067	"	8	"	2	"
1068	4068	6068	60	8	1	3	NS
1069	4069	6069	"	"	"	4	"
1070	4070	6070	"	"	"	5	"
1071	4071	6071	"	"	"	6 1/	"
1072	4072	6072	"	"	"	6	"
1073	4073	6073	"	9	"	2	"
1074	4074	6074	"	"	"	3	"
1075	4075	6075	"	"	"	4	"
1076	4076	6076	"	"	"	5	"
1077	4077	6077	"	"	"	6 1/	"
1078	4078	6078	"	"	"	6	"
1079	4079	6079	"	10	"	2	"
1080	4080	6080	"	"	"	3	"
1081	4081	6081	"	"	"	4	"
1082	4082	6082	"	"	"	5	"

TABLE III. Switching characteristics and PIN's (M3786/4-) - Continued.

Dash Number			Angle of throw	No. of decks	Poles per decks	Position per pole	Switching characteristic (S or NS)
Construction: E Temp.-life characteristic: B Style: SR04-1	Construction: E Temp.-life characteristic: C Style: SR04-1	Construction: F Temp.-life characteristic: C Style: SR04-1					
1083	4083	6083	"	"	"	6 1/	"
1084	4084	6084	"	"	"	6	"
1085	4085	6085	"	1	"	2	S
1086	4086	6086	"	"	"	3	"
1087	4087	6087	"	"	"	4	"
1088	4088	6088	"	"	"	5	"
1089	4089	6089	"	"	"	6 1/	"
1090	4090	6090	"	"	"	6	"
1091	4091	6091	"	2	"	2	"
1092	4092	6092	"	"	"	3	"
1093	4093	6093	"	"	"	4	"
1094	4094	6094	"	"	"	5	"
1095	4095	6095	"	"	"	6 1/	"
1096	4096	6096	"	"	"	6	"
1097	4097	6097	"	3	"	2	"
1098	4098	6098	"	"	"	3	"
1099	4099	6099	"	"	"	4	"
1100	4100	6100	"	"	"	5	"
1101	4101	6101	"	"	"	6 1/	"
1102	4102	6102	"	"	"	6	"
1103	4103	6103	"	4	"	2	"
1104	4104	6104	"	"	"	3	"
1105	4105	6105	"	"	"	4	"
1106	4106	6106	"	"	"	5	"
1107	4107	6107	"	"	"	6 1/	"
1108	4108	6108	"	"	"	6	"
1109	4109	6109	60	5	1	2	S
1110	4110	6110	"	"	"	3	"
1111	4111	6111	"	"	"	4	"
1112	4112	6112	"	"	"	5	"
1113	4113	6113	"	"	"	6 1/	"
1114	4114	6114	"	"	"	6	"
1115	4115	6115	"	6	"	2	"
1116	4116	6116	"	"	"	3	"
1117	4117	6117	"	"	"	4	"
1118	4118	6118	"	"	"	5	"
1119	4119	6119	"	"	"	6 1/	"
1120	4120	6120	"	"	"	6	"
1121	4121	6121	"	7	"	2	"
1122	4122	6122	"	"	"	3	"
1123	4123	6123	"	"	"	4	"
1124	4124	6124	"	"	"	5	"
1125	4125	6125	"	"	"	6 1/	"
1126	4126	6126	"	"	"	6	"
1127	4127	6127	"	8	"	2	"
1128	4128	6128	"	"	"	3	"
1129	4129	6129	"	"	"	4	"
1130	4130	6130	"	"	"	5	"
1131	4131	6131	"	"	"	6 1/	"
1132	4132	6132	"	"	"	6	"
1133	4133	6133	"	9	"	2	"
1134	4134	6134	"	"	"	3	"
1135	4135	6135	"	"	"	4	"

TABLE III. Switching characteristics and PIN's (M3786/4-) - Continued.

Dash Number			Angle of throw	No. of decks	Poles per decks	Position per pole	Switching characteristic (S or NS)
Construction: E Temp.-life characteristic: B Style: SR04-1	Construction: E Temp.-life characteristic: C Style: SR04-1	Construction: F Temp.-life characteristic: C Style: SR04-1					
1136	4136	6136	"	"	"	5	"
1137	4137	6137	"	"	"	6 1/	"
1138	4138	6138	"	"	"	6	"
1139	4139	6139	"	10	"	2	"
1140	4140	6140	"	"	"	3	"
1141	4141	6141	"	"	"	4	"
1142	4142	6142	"	"	"	5	"
1143	4143	6143	"	"	"	6 1/	"
1144	4144	6144	"	"	"	6	"
1145	4145	6145	90	1	"	2	NS
1146	4146	6146	"	"	"	3	"
1147	4147	6147	"	"	"	4 1/	"
1148	4148	6148	"	"	"	4	"
1149	4149	6149	"	2	"	2	"
1150	4150	6150	90	2	1	3	NS
1151	4151	6151	"	"	"	4 1/	"
1152	4152	6152	"	"	"	4	"
1153	4153	6153	"	3	"	2	"
1154	4154	6154	"	"	"	3	"
1155	4155	6155	"	"	"	4 1/	"
1156	4156	6156	"	"	"	4	"
1157	4157	6157	"	4	"	2	"
1158	4158	6158	"	"	"	3	"
1159	4159	6159	"	"	"	4 1/	"
1160	4160	6160	"	"	"	4	"
1161	4161	6161	"	5	"	2	"
1162	4162	6162	"	"	"	3	"
1163	4163	6163	"	"	"	4 1/	"
1164	4164	6164	"	"	"	4	"
1165	4165	6165	"	6	"	2	"
1166	4166	6166	"	"	"	3	"
1167	4167	6167	"	"	"	4 1/	"
1168	4168	6168	"	"	"	4	"
1169	4169	6169	"	7	"	2	"
1170	4170	6170	"	"	"	3	"
1171	4171	6171	"	"	"	4 1/	"
1172	4172	6172	"	"	"	4	"
1173	4173	6173	"	8	"	2	"
1174	4174	6174	"	"	"	3	"
1175	4175	6175	"	"	"	4 1/	"
1176	4176	6176	"	"	"	4	"
1177	4177	6177	"	9	"	2	"
1178	4178	6178	"	"	"	3	"
1179	4179	6179	"	"	"	4 1/	"
1180	4180	6180	"	"	"	4	"
1181	4181	6181	"	10	"	2	"
1182	4182	6182	"	"	"	3	"
1183	4183	6183	"	"	"	4 1/	"
1184	4184	6184	"	"	"	4	"
1185	4185	6185	"	1	"	2	S
1186	4186	6186	"	"	"	3	"
1187	4187	6187	"	"	"	4 1/	"
1188	4188	6188	"	"	"	4	"

TABLE III. Switching characteristics and PIN's (M3786/4-) - Continued.

Dash Number			Angle of throw	No. of decks	Poles per decks	Position per pole	Switching characteristic (S or NS)
Construction: E Temp.-life characteristic: B Style: SR04-1	Construction: E Temp.-life characteristic: C Style: SR04-1	Construction: F Temp.-life characteristic: C Style: SR04-1					
1189	4189	6189	"	2	"	2	"
1190	4190	6190	"	"	"	3	"
1191	4191	6191	90	2	1	4 1/	S
1192	4192	6192	"	"	"	4	"
1193	4193	6193	"	3	"	2	"
1194	4194	6194	"	"	"	3	"
1195	4195	6195	"	"	"	4 1/	"
1196	4196	6196	"	"	"	4	"
1197	4197	6197	"	4	"	2	"
1198	4198	6198	"	"	"	3	"
1199	4199	6199	"	"	"	4 1/	"
1200	4200	6200	"	"	"	4	"
1201	4201	6201	"	5	"	2	"
1202	4202	6202	"	"	"	3	"
1203	4203	6203	"	"	"	4 1/	"
1204	4204	6204	"	"	"	4	"
1205	4205	6205	"	6	"	2	"
1206	4206	6206	"	"	"	3	"
1207	4207	6207	"	"	"	4 1/	"
1208	4208	6208	"	"	"	4	"
1209	4209	6209	"	7	"	2	"
1210	4210	6210	"	"	"	3	"
1211	4211	6211	"	"	"	4 1/	"
1212	4212	6212	"	"	"	4	"
1213	4213	6213	"	8	"	2	"
1214	4214	6214	"	"	"	3	"
1215	4215	6215	"	"	"	4 1/	"
1216	4216	6216	"	"	"	4	"
1217	4217	6217	"	9	"	2	"
1218	4218	6218	"	"	"	3	"
1219	4219	6219	"	"	"	4 1/	"
1220	4220	6220	"	"	"	4	"
1221	4221	6221	"	10	"	2	"
1222	4222	6222	"	"	"	3	"
1223	4223	6223	"	"	"	4 1/	"
1224	4224	6224	"	"	"	4	"
1225	4225	7103	45	1	2	2	NS
1226	4226	7104	"	"	"	3	"
1227	4227	7105	"	"	"	4	"
1228	4228	7106	"	2	"	2	"
1229	4229	7107	"	"	"	3	"
1230	4230	7108	"	"	"	4	"
1231	4231	7109	"	3	"	2	"
1232	4232	7110	45	3	2	3	NS
1233	4233	7111	"	"	"	4	"
1234	4234	7112	"	4	"	2	"
1235	4235	7113	"	"	"	3	"
1236	4236	7114	"	"	"	4	"
1237	4237	7115	"	5	"	2	"
1238	4238	7116	"	"	"	3	"
1239	4239	7117	"	"	"	4	"
1240	4240	7118	"	6	"	2	"
1241	4241	7119	"	"	"	3	"

TABLE III. Switching characteristics and PIN's (M3786/4-) - Continued.

Dash Number			Angle of throw	No. of decks	Poles per decks	Position per pole	Switching characteristic (S or NS)
Construction: E Temp.-life characteristic: B Style: SR04-1	Construction: E Temp.-life characteristic: C Style: SR04-1	Construction: F Temp.-life characteristic: C Style: SR04-1					
1242	4242	7120	"	"	"	4	"
1243	4243	7121	"	1	"	2	S
1244	4244	7122	"	"	"	3	"
1245	4245	7123	"	"	"	4	"
1246	4246	7124	"	2	"	2	"
1247	4247	7125	"	"	"	3	"
1248	4248	7126	"	"	"	4	"
1249	4249	7127	"	3	"	2	"
1250	4250	7128	"	"	"	3	"
1251	4251	7129	"	"	"	4	"
1252	4252	7130	"	4	"	2	"
1253	4253	7131	"	"	"	3	"
1254	4254	7132	"	"	"	4	"
1255	4255	7133	"	5	"	2	"
1256	4256	7134	"	"	"	3	"
1257	4257	7135	"	"	"	4	"
1258	4258	7136	"	6	"	2	"
1259	4259	7137	"	"	"	3	"
1260	4260	7138	"	"	"	4	"

Dash number	Angle of throw	No. of decks	Poles per decks	Position per pole	Switching characteristic S or NS)
Construction: E Temp.-life characteristic: C Style: SR04-1					
7001	30	1	1	2	NS
7002	"	"	"	3	"
7003	"	"	"	4	"
7004	"	"	"	5	"
7005	"	"	"	6	"
7006	"	"	"	7	"
7007	"	"	"	8	"
7008	"	"	"	9	"
7009	"	"	"	10	"
7010	"	"	"	11	"
7011	"	"	"	12 1/	"
7012	"	"	2	2	"
7013	"	"	"	3	"
7014	"	"	"	4	"
7015	"	"	"	5	"
7016	"	"	"	6	"
7017	"	"	1	2	S
7018	"	"	"	3	"
7019	"	"	"	4	"
7020	"	"	"	5	"
7021	"	"	"	6	"
7022	"	"	"	7	"
7023	"	"	"	8	"
7024	"	"	"	9	"
7025	"	"	"	10	"
7026	"	"	"	11	"
7027	"	"	"	12 1/	"
7028	"	"	2	2	"
7029	"	"	"	3	"
7030	"	"	"	4	"

TABLE III. Switching characteristics and PIN's (M3786/4-) - Continued.

Dash number Construction: E Temp.-life characteristic: C Style: SR04-1	Angle of throw	No. of decks	Poles per decks	Position per pole	Switching characteristic S or NS)
7031	"	"	"	5	"
7032	"	"	"	6	"
7033	"	2	1	2	NS
7034	"	"	"	3	"
7035	"	"	"	4	"
7036	"	"	"	5	"
7037	"	"	"	6	"
7038	"	"	"	7	"
7039	"	"	"	8	"
7040	"	"	"	9	"
7041	30	2	1	10	NS
7042	"	"	"	11	"
7043	"	"	"	12 1/	"
7044	"	"	2	2	"
7045	"	"	"	3	"
7046	"	"	"	4	"
7047	"	"	"	5	"
7048	"	"	"	6	"
7049	"	"	1	2	S
7050	"	"	"	3	"
7051	"	"	"	4	"
7052	"	"	"	5	"
7053	"	"	"	6	"
7054	"	"	"	7	"
7055	"	"	"	8	"
7056	"	"	"	9	"
7057	"	"	"	10	"
7058	"	"	"	11	"
7059	"	"	"	12 1/	"
7060	"	"	2	2	"
7061	"	"	"	3	"
7062	"	"	"	4	"
7063	"	"	"	5	"
7064	"	"	"	6	"
7065	"	3	1	2	NS
7066	"	"	"	3	"
7067	"	"	"	4	"
7068	"	"	"	5	"
7069	"	"	"	6	"
7070	"	"	"	7	"
7071	"	"	"	8	"
7072	"	"	"	9	"
7073	"	"	"	10	"
7074	"	"	"	11	"
7075	"	"	"	12 1/	"
7076	"	"	2	2	"
7077	"	"	"	3	"
7078	"	"	"	4	"
7079	"	"	"	5	"
7080	"	"	"	6	"
7081	"	"	1	2	S
7082	30	3	1	3	S
7083	"	"	"	4	"
7084	"	"	"	5	"
7085	"	"	"	6	"
7086	"	"	"	7	"
7087	"	"	"	8	"
7088	"	"	"	9	"
7089	"	"	"	10	"

TABLE III. Switching characteristics and PIN's (M3786/4-) - Continued.

Dash number Construction: E Temp.-life characteristic: C Style: SR04-1	Angle of throw	No. of decks	Poles per decks	Position per pole	Switching characteristic S or NS)
7090	"	"	"	11	"
7091	"	"	"	12 1/	"
7092	"	"	2	2	"
7093	"	"	"	3	"
7094	"	"	"	4	"
7095	"	"	"	5	"
7096	"	"	"	6	"
7097	"	1	1	12	NS
7098	"	2	"	12	"
7099	"	3	"	12	"
7100	"	1	"	12	S
7101	"	2	"	12	"
7102	"	3	"	12	"

1/ Continuous rotation

NOTE: Switch configurations not listed on table III shall be coordinated with manufacturers listed on the QPL for this specification sheet before specifying a particular "M" number. The fact that a switch configuration can be coded does not necessarily mean that it can be manufactured or procured.

TABLE IV. Code letters for number of decks and switching characteristics.

Total number of decks	Number of nonshorting decks 1/													
	Code letters	A 0	B 1	C 2	D 3	E 4	F 5	G 6	H 7	J 8	K 9	L 10	M 11	N 12
1	A	AA	AB											
2	B	BA	BB	BC										
3	C	CA	CB	CC	CD									
4	D	DA	DB	DC	DD	DE								
5	E	EA	EB	EC	ED	EE	EF							
6	F	FA	FB	FC	FD	FE	FF	FG						
7	G	GA	GB	GC	GD	GE	GF	GG	GH					
8	H	HA	HB	HC	HD	HE	HF	HG	HH	HJ				
9	J	JA	JB	JC	JD	JE	JF	JG	JH	JJ	JK			
10	K	KA	KB	KC	KD	KE	KF	KG	KH	KJ	KK	KL		
11	L	LA	LB	LC	LD	LE	LF	LG	LH	LJ	LK	LL	LM	
12	M	MA	MB	MC	MD	ME	MF	MG	MH	MJ	MK	ML	MM	MN

1/ When a combination of shorting and nonshorting decks are required, the nonshorting decks will be closest to the front of the switch and the shorting decks will be installed last.

TABLE V. Code letter for combination of angle of throw, poles per deck, and number of positions per pole.

Code letter	Angle of throw	Poles per deck	Number of pos.	Code letter	Angle of throw	Poles per deck	Number of pos.	Code letter	Angle of throw	Poles per deck	Number of pos.
AA	30	1	2	BD	30	6	2	CG	45	1	8
AB	30	1	3	BE	36	1	2	CH	45	1	8 1/
AC	30	1	4	BF	36	1	3	CJ	45	2	2
AD	30	1	5	BG	36	1	4	CK	45	2	3
AE	30	1	6	BH	36	1	5	CL	45	2	4
AF	30	1	7	BJ	36	1	6	CM	45	4	2
AG	30	1	8	BK	36	1	7	CN	60	1	2
AH	30	1	9	BL	36	1	8	CP	60	1	3
AJ	30	1	10	BM	36	1	9	CR	60	1	4
AK	30	1	11	BN	36	1	10	CT	60	1	5
AL	30	1	12	BP	36	1	10 1/	CV	60	1	6
AM	30	1	12 1/	BR	36	2	2	CW	60	1	6 1/
AN	30	2	2	BT	36	2	3	CY	60	2	2
AP	30	2	3	BV	36	2	4	DA	60	2	3
AR	30	2	4	BW	36	2	5	DB	60	3	2
AT	30	2	5	BY	45	1	2	DC	90	1	2
AV	30	2	6	CA	45	1	3	DD	90	1	3
AW	30	3	2	CB	45	1	4	DE	90	1	4
AY	30	3	3	CC	45	1	5	DF	90	1	4 1/
BA	30	3	4	CD	45	1	6	DG	90	2	2
BB	30	4	2	CE	45	1	7	DH			
BC	30	4	3	CF	45	1	8	DJ			

1/ Continuous rotation

TABLE VI. Code letter for type construction, low level capability shaft grounding, temp-life characteristic, and shock type. 1/

Code letter	Type construction	Low level capability	Shaft grounding	Temp. – life characteristic	Shock type
A	J	YES	YES	C	B
B	J	YES	NO	C	B
C	J	NO	YES	C	B
D	J	NO	NO	C	B
E	K	YES	YES	C	B
F	K	YES	NO	C	B
G	K	NO	YES	C	B
H	K	NO	NO	C	B

1/ Applicable to J and K construction only.

TABLE VII. List of superseded PIN's.

Superseded PIN's M3786/4-	New PIN's 0589 - 0700 M3786/4-	Superseded PIN's M3786/4-	New PIN's 0589 - 0700 M3786/4-	Superseded PIN's M3786/4-	New PIN's 0589 - 0700 M3786/4-
0017	0589	0346	0637	0502	0685
0018	0590	0347	0638	0503	0686
0019	0591	0348	0639	0504	0687
0039	0592	0349	0640	0505	0688
0040	0593	0359	0641	0515	0689
0041	0594	0360	0642	0516	0690
0061	0595	0361	0643	0517	0691
0062	0596	0362	0644	0518	0692
0063	0597	0372	0645	0528	0693
0083	0598	0373	0646	0529	0694
0084	0599	0374	0647	0530	0695
0085	0600	0375	0648	0531	0696
0105	0601	0385	0649	0541	0697
0106	0602	0386	0650	0542	0698
0107	0603	0387	0651	0543	0699
0126	0604	0388	0652	0544	0700
0127	0605	0389	0653		
0128	0606	0399	0654		
0147	0607	0400	0655		
0148	0608	0401	0656		
0149	0609	0411	0657		
0166	0610	0412	0658		
0167	0611	0413	0659		
0168	0612	0414	0660		
0185	0613	0424	0661		
0186	0614	0425	0662		
0187	0615	0426	0663		
0207	0616	0427	0664		
0208	0617	0437	0665		
0209	0618	0438	0666		
0229	0619	0439	0667		
0230	0620	0440	0668		
0231	0621	0450	0669		
0251	0622	0451	0670		
0252	0623	0452	0671		
0253	0624	0453	0672		
0273	0625	0463	0673		
0274	0626	0464	0674		
0275	0627	0465	0675		
0294	0628	0466	0676		
0295	0629	0476	0677		
0296	0630	0477	0678		
0315	0631	0478	0679		
0316	0632	0479	0680		
0317	0633	0489	0681		
0334	0634	0490	0682		
0335	0635	0491	0683		
0336	0636	0492	0684		

Changes from previous issue. The margins of this specification are marked with vertical lines to indicate where changes from the previous issue were made. This was done as a convenience only and the Government assumes no liability whatsoever for any inaccuracies in these notations. Bidders and contractors are cautioned to evaluate the requirements of this document based on the entire content irrespective of the marginal notations and relationship to the previous issue.

Referenced documents:

MIL-DTL-3786	MIL-PRF-94/2	MIL-PRF-94/3	MIL-PRF-94/4
MIL-PRF-94/5	MS25082	NASM35333	

Custodians:
Army - CR
Navy - EC
Air Force - 85
DLA - CC

Preparing activity:
DLA - CC

(Project 5930-2024-082)

NOTE: The activities listed above were interested in this document as of the date of this document. Since organizations and responsibilities can change, you should verify the currency of the information above using the ASSIST Online database at https://assist.dla.mil/.