INCH-POUND

MIL-DTL-3661/56B
w/AMENDMENT 2
29 July 2024

SUPERSEDING
MIL-L-3661/56B
25 October 1978
AMENDMENT 1
24 June 2003

DETAIL SPECIFICATION SHEET

Lampholder, Lenses, Indicator Light, Style LC42

This specification is approved for use by all
Departments and Agencies of the Department of Defense.

The requirements for acquiring the product described herein shall consist of this specification sheet and MIL-DTL-3661.

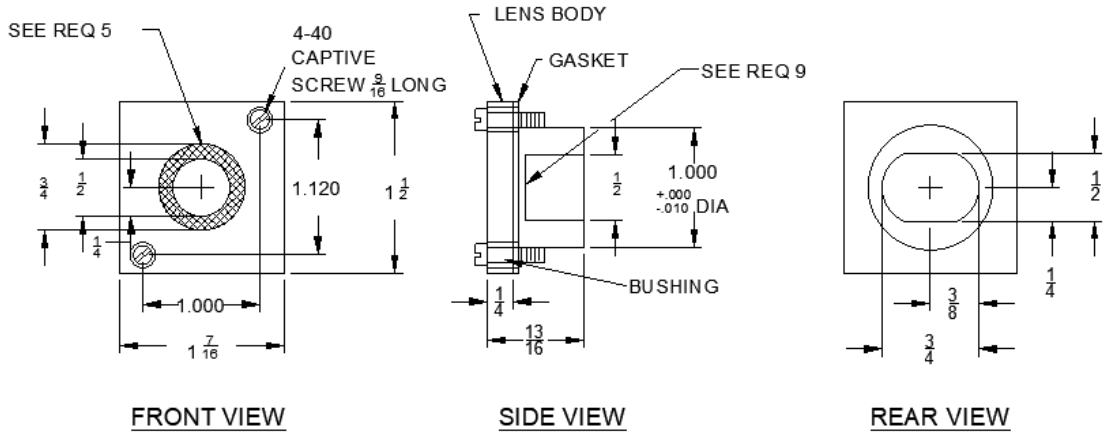

Inches	mm	Inches	mm
0.010	0.25	1.000	25.40
1/4	6.35	1.200	28.45
3/8	9.53	1-7/16	36.51
7/16	11.11	1-1/2	38.10
1/2	12.70		
9/16	14.29		
3/4	19.05		
13/16	20.64		

FIGURE 1. Style LC42 lenses.

DISTRIBUTION STATEMENT A: Approved for public release; Distribution is unlimited.

NOTES:

1. Dimensions are in inches. Unless otherwise specified, tolerances are ± 1/64 inch (0.38mm) for fractions and ± 0.005 inch (0.13mm) for decimals.
2. Metric equivalents (to the nearest 0.01mm) are given for general information only and are based upon 1 inch = 25.4 mm.

REQUIREMENTS:

1. Qualification: Not required.
2. Material:
   (a) Lens body: Material for the lens body for each type of designation shall be as shown in Table I and as follows:
      (1) Red: Transparent, heat-resistant acrylic plastic having a 90 ± 5 percent light transmission in the range of 590 to 700 nanometers (nm) wavelength.
      (2) Blue: Transparent, heat-resistant acrylic plastic having 50 ± 5 percent light transmission in the range of 425 to 475 nm wavelength.
      (3) Green: Transparent, heat-resistant acrylic plastic having 40 ± 5 percent light transmission in the range of 475 to 550 nm wavelength.
      (4) Yellow: Transparent, heat-resistant acrylic plastic having 90 ± 5 percent light transmission in the range of 525 to 700 nm wavelength.
      (5) White: Translucent, heat-resistant acrylic plastic having a 66.5 ± 5 percent light transmission in 1/8 inch thickness.
      (6) Colorless: Transparent, heat-resistant acrylic plastic having 95 ± 5 percent light transmission in the range of 400 to 690 nm wavelength.
   (b) Gaset: Rubber.
   (c) Screw: Corrosion resistant steel.
   (d) Bushing: Brass.
3. Design and construction: See figure 1.
4. Finish: Exterior surfaces, except crosshatched areas and the cavity on the back side of the lens, shall be painted white 0.004 inch (0.09 mm) to 0.006 inch (0.14 mm) thick, followed by a coat of gray paint 0.002 inch (0.05 mm) to 0.005 inch (0.13 mm) thick. The paint on the outside of the lens shall be capable of withstanding the surface endurance test specified herein.
5. Lens face color shall be exposed in crosshatched area. Paint shall not be permitted in this area.
6. Sealing: Dripproof.
7. Temperature cycling: Minus 55°C to plus 125°C.
8. Shock: Method II.
9. Paint shall not be permitted on inside of cap.
10. Marking: The following marking shall appear on the back side of each lens:
    (a) MIL-DTL-3661/56
    (b) Type designation.
    (c) Manufacturer's name or trademark.

TABLE I. Style LC42 lenses.

Type Designation[1/]	Lens Material	Transmittance	Lens Color	Requirement
LC42RN3	Plastic	Transparent	Red	2(a) (1)
LC42BN3	Plastic	Transparent	Blue	2(a) (2)
LC42GN3	Plastic	Transparent	Green	2(a) (3)
LC42YN3	Plastic	Transparent	Yellow	2(a) (4)
LC42WT3	Plastic	Transparent	White	2(a) (5)
LC42CN3	Plastic	Transparent	Colorless	2(a) (6)

1/ The style LC42 lenses shall mate with any of the indicator light housings shown on MILL-L-3661/61 through MIL-DTL-3661/65.

Supersession data: This specification sheet replaces style 3 of MS17140 for new design only. Not interchangeable with MS17140.

VERIFICATION

First article inspection:

Complete lampholder assembly: When lenses specified herein are acquired as a part of an assembly, the lenses with the indicator light housing shall be subjected to the applicable tests listed in MIL-DTL-3661. The transmission and surface endurance tests specified herein shall also be required.

Lenses: When lenses are acquired separately, first article inspection shall consist of the following examination and test:

(a) Visual and dimensional examination.
(b) Sealing.
(c) Transmittance (as specified herein).
(d) Temperature cycling.
(e) Surface endurance (as specified herein).

Conformance inspection: When lenses are acquired separately, conformance inspection shall consist of the following:

(a) Visual and dimensional examination.
(b) Sealing.

Sampling for conformance inspection. A random sample of lenses shall be selected from each lot in accordance with MIL-STD-1916, verification level I. Any lens in the sample containing one or more defects or failing to conform to the sealing test shall be rejected. If the number of nonconforming lenses in any sample exceeds the acceptance number for that sample, the lot represented by the sample shall be rejected.

Tests:

Transmission: The transmission test to determine conformance with requirement 2(a) shall be conducted in accordance with SAE-AS25050.

Surface endurance: The apparatus shall consist of a device which will apply a vertical load of 1.000 grams to the point of a needle held at an angle of 45 degrees to the horizontal. The apparatus shall hold the lens in a horizontal position and shall allow the entire length of the lens to pass horizontally under the needle in a rapid manner. The line scratched on the lens shall lie in the vertical plane containing the axis of the needle. The direction of movement of the lens relative to the needle shall be in the direction of the point. Figure 2 shows the general form of the equipment. The steel needle shall have a right conical point having a vertex angle of 16 to 20 degrees and a spherical tip with a radius of 0.002 to 0.0025 inch. A needle may be used for only one pass unless it is carefully checked to ensure that its dimensions are within the limits indicated in figure 2. The test shall consist of one pass of the needle on the front surface of the lens and one pass along the longest side of the lens, and shall not break the surface so as to cause light leakage from the lens or distortion of any marking.

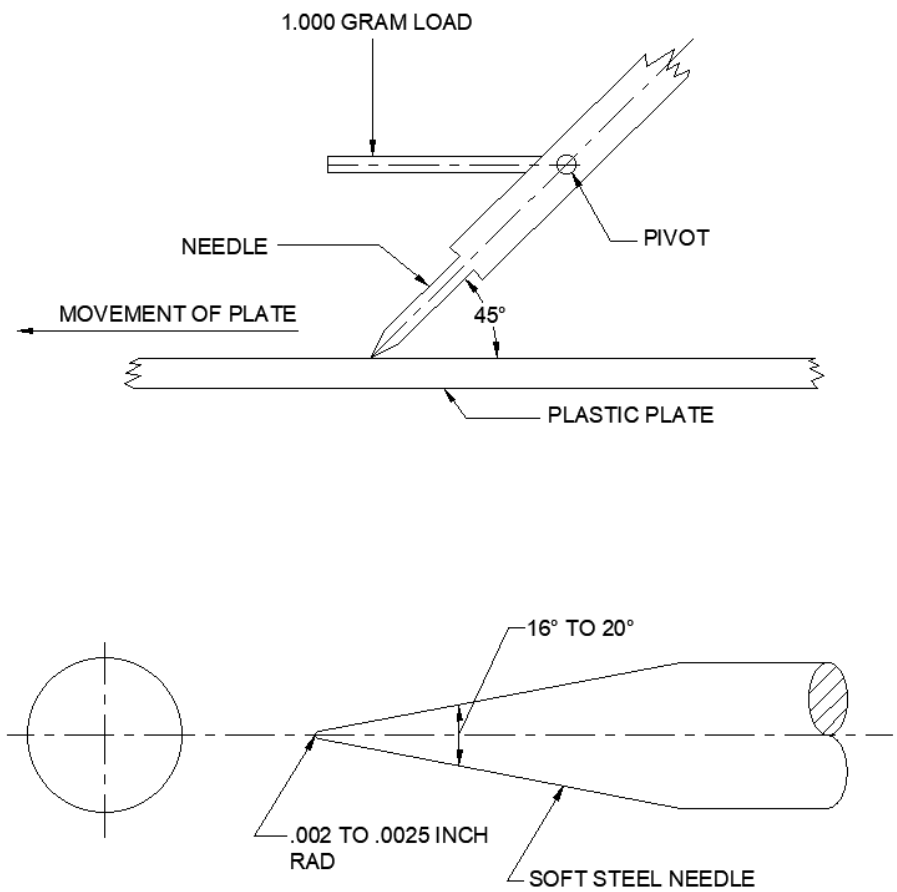

FIGURE 2. Surface endurance test apparatus.

Referenced documents. In addition to MIL-DTL-3661, this document references the following:

MIL-L-3661/61	MIL-DTL-3661/65
MIL-L-3661/62	MIL-STD-1916
MIL-L-3661/63	SAE-AS25050
MIL-L-3661/64	

Amendment notations. The margins of this specification are marked with vertical lines to indicate modifications generated by this amendment. This was done as a convenience only and the Government assumes no liability whatsoever for any inaccuracies in these notations. Bidders and contractors are cautioned to evaluate the requirements of this document based on the entire content irrespective of the marginal notations.

CONCLUDING MATERIAL

Custodians:
Navy – SH
DLA – GS2

Preparing activity:
DLA – CC

(Project 6210-2024-010)

NOTE: The activities listed above were interested in this document as of the date of this document. Since organizations and responsibilities can change, you should verify the currency of the information above using the ASSIST Online database at https://assist.dla.mil.