INCH-POUND
MIL-DTL-32689/12
31 March 2022

DETAIL SPECIFICATION SHEET

CONNECTORS, ELECTRICAL, BACKSHELL, ENVIRONMENTAL, 90 DEGREE SPIN COUPLING

This specification is approved for use by all Departments
and Agencies of the Department of Defense.

The requirements for acquiring the product described herein
shall consist of this specification sheet and MIL-DTL-32689/8.

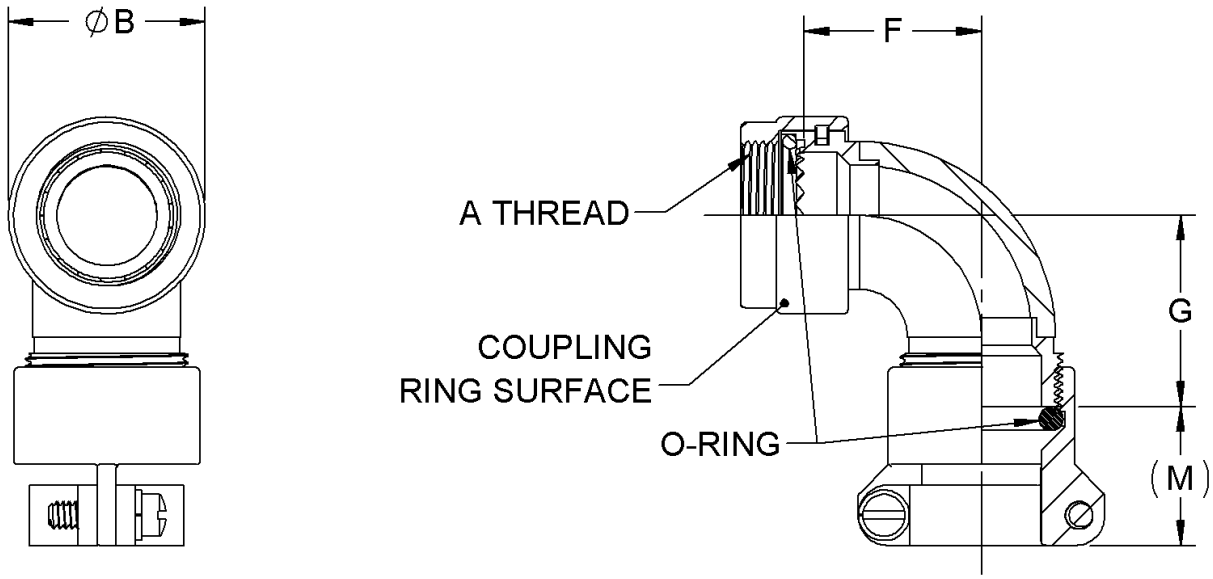

Notes
1. Dimensions accordance with MIL-DTL-32689/8, Design 1.1 unless otherwise defined in this specification sheet.
2. Dimension G in accordance with Design 1.A.1.
3. Coupling ring surface depicted as an example. Coupling ring surface details other wised defined.
4. Dimension F is from the backside of the teeth feature.

FIGURE 1. Backshell dimensions.

REQUIREMENTS

Part shall be in accordance with MIL-DTL-32689/8, Design 1 unless otherwise defined in this specification sheet..

Referenced documents. This document references MIL-DTL-32689/8.

AMSC N/A FSC 5935
DISTRIBUTION STATEMENT A. Approved for public release; distribution is unlimited.

CONCLUDING MATERIAL

Custodians:
Army – CR
Navy - AS
Air Force – 85
DLA - CC

Review activities:
Navy - EC, MC

Preparing activity:
DLA - CC

(Project 5935-2022-030)

NOTE: The activities listed above were interested in this document as of the date of this document. Since organizations and responsibilities can change, you should verify the currency of the information above using the ASSIST Online database at https://assist.dla.mil.