INCH-POUND

MIL-DTL-32480/5A
w/AMENDMENT 1
20 November 2023
SUPERSEDING
MIL-DTL-32480/5A
28 May 2020

DETAIL SPECIFICATION SHEET

FITTING, ADAPTER, 45 DEGREE ELBOW, HYDRAULIC AND PNEUMATIC, FLARELESS MALE TO ORFS BULKHEAD

This specification is approved for use by all Departments and Agencies of the Department of Defense.

The requirements for acquiring the product described herein shall consist of this specification sheet and MIL-DTL-32480.

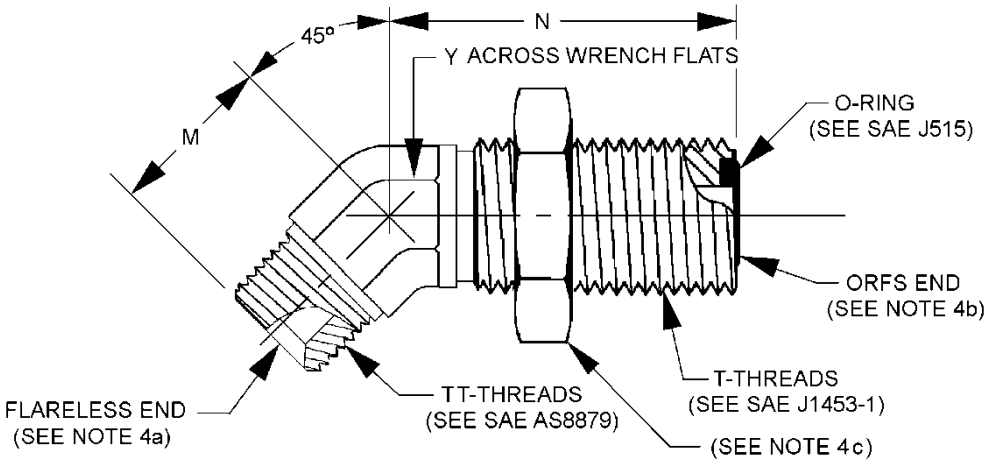

Dash size	Tube OD nom. inches (mm)	T ORFS SAE J1453-1	TT Flareless SAE AS8879
-4	.2500 (6.350)	0.5625-18UNF-2A	.4375-20 UNJF-3A
-6	.3750 (9.525)	0.6875-16UN-2A	.5000-20 UNJF-3A
-8	.5000 (12.700)	0.8125-16UN-2A	.7500-16 UNJF-3A
-10	.6250 (15.875)	1.0000-14UN-2A	.8750-14 UNJF-3A
-12	.7500 (19.050)	1.1875-12UN-2A	1.0625-12 UNJ-3A
-16	1.0000 (25.400)	1.4375-12UN-2A	1.3125-12 UNJ-3A
-20	1.2500 (31.750)	1.6875-12UN-2A	1.6250-12 UNJ-3A
-24	1.5000 (38.100)	2.0000-12UN-2A	1.8750-12 UNJ-3A

See notes at end of figure.

FIGURE 1. 45° elbow, flareless to bulkhead ORFS adapter.

DISTRIBUTION STATEMENT A: Approved for public release; Distribution is unlimited.

Dash size	Tube OD nom. inches (mm)	Y - Hex Across flats +.0, -.03 (+.0, -0.8)	M inches (mm) ±.04 (1.0)	N inches (mm) ±.04 (1.0)
-4	.2500 (6.350)	.4375 (11.113)	.720 (18.29)	1.732 (44.00)
-6	.3750 (9.525)	.5625 (14.285)	.830 (21.08)	1.909 (48.50)
-8	.5000 (12.700)	.7500 (19.050)	.980 (24.89)	2.008 (51.00)
-10	.6250 (15.875)	.8750 (22.225)	1.110 (28.19)	2.224 (56.50)
-12	.7500 (19.050)	1.0625 (26.988)	1.280 (32.51)	2.382 (60.50)
-16	1.0000 (25.400)	1.3125 (33.338)	1.470 (37.34)	2.559 (65.00)
-20	1.2500 (31.750)	1.6250 (41.275)	1.590 (40.39)	2.638 (67.00)
-24	1.5000 (38.100)	1.8750 (47.625)	1.780 (45.21)	2.638 (67.00)

NOTES:
1. Dimensions are in inches.
2. Metric equivalents are given for information only.
3. Break all sharp edges and remove all burrs and slivers.
4. Dimensions and tolerances not shown shall be in accordance with the following:
   a. SAE AS4375 style G for flareless end.
   b. SAE J1453-3*520801* for ORFS bulkhead.
   c. SAE J1453-3*520118* bulkhead locknut.

FIGURE 1. 45° elbow, flareless to bulkhead ORFS adapter - Continued.

REQUIREMENTS:

Fittings shall be as specified on figure 1 and in table I.

Materials and finishes shall be in accordance with MIL-DTL-32480.

Dimensions. All dimensions not specified on figure 1 shall be in accordance with SAE AS4375 for the flareless end, SAE J1453-3 for the ORFS end and SAE J514 for the body.

Across flat widths. Across flat widths shall fit standard wrench openings size shall be in accordance with applicable style code SAE J514 45º elbow.

Inside diameter. The inside diameter shall be in accordance with SAE AS4375 for the flareless end and SAE J1545-3 for the ORFS end, drill depth shall be optional with manufacturer.

Wall thickness. Wall thickness shall be in accordance with SAE AS4375 for the flareless end and SAE J1453-3 for the ORFS end.

Body thickness. The radius and body thickness shall conform to SAE J514.

Material and finish designators. Material and finish designators shall be as specified in table I.

Plating's. Unless otherwise specified, all plating's shall be capable of meeting a minimum of 96 hours salt spray test in accordance with ASTM B117. The fittings shall show no evidence of red corrosion after 96 hours of salt spray. Fluid passages, other openings, and internal threads shall not be subject to the plating thickness requirement and may have bare areas provided they are protected with a light film of oil.

TABLE I. Material and finish identification codes.

PIN code material/plating finish	Material	Plating finish
Blank	Steel	Cadmium plating in accordance with SAE-AMS-C-81562, type II, class 2 or SAE-AMS-QQ-P-416, type II, class 2. 1/ 5/ 7/
H	Steel	Zinc-aluminum in accordance with ASTM F1136/F1136M, grade 3, NC.
J	Steel	Zinc-nickel in accordance with SAE-AMS2417, type 2, grade B. 2/
KA	Steel 4130 or 4140	Zinc Nickel Electroplate, MIL-PRF-32647, Type K20 torque/tension modifier. 3/ 4/ 9/
KB	Steel 4130 or 4140	Zinc Nickel Electroplate, MIL-PRF-32647, Type K16 torque/tension modifier. 3/ 4/ 9/
M	Nickel-copper alloy UNS N04400	No additional finish.
N	High-chromium nickel alloy UNS N06690	No additional finish.
P	Steel	Zinc phosphate finish in accordance MIL-DTL-16232 type Z, class 1. 4/
R	Steel	Zinc plating in accordance with ASTM B633, type V, Fe/Zn 8. 4/
S	Corrosion resistant steel	No additional finish. Passivation in accordance with SAE-AMS2700, method 1, type 6 or 7.
T	Titanium	Anodize in accordance with SAE-AMS2488 type 2. 6/ 8/
TF	Titanium	Fluoride phosphate in accordance with SAE-AMS2486. 6/ 8/
Z	Steel	Zinc plating in accordance with ASTM B695, type II, class 8. 4/ 5/
ZC	Steel	Zinc may be any zinc plating from PIN codes J and R with a colored chromate coating. 4/ 5/
ZF	Steel	Zinc plating in accordance with ASTM B633, type VI, class 8. 4/

1/ Embrittlement test need not be run.
2/ The zinc-nickel alloy plate shall contain 12% to 16% nickel. The coating thickness shall be 315µ inches (8µm) minimum.
3/ Corrosion requirements shall be in accordance with MIL-PRF-32647.
4/ Not for use in aircraft. Requires approval from the Program Office for all applications. Zinc-plated materials should be avoided in hydraulic systems with water-glycol fluids. Reference ASTM MNL37 - Fuels and Lubricants Handbook.
5/ These finishes have a chromate conversion coating which includes hexavalent chromium and are not recommended for Army ground systems. The use of coatings depositing hexavalent chromium for Army hexavalent chromium ground vehicles is prohibited unless otherwise explicitly stated in the contract as a requirement. For new designs PIN codes Blank, P, Z, and ZC are not to be supplied to Army and Marine ground forces.
6/ A pretreatment, a modification of the fluoride treatment, or a post treatment shall be applied so the final color of the fittings shall be similar to SAE-AMS-STD-595 colors 36076, 36081, 36099, 36118, 36134, 36152, 36170, 36173, 36176, 36231, 36251, 36270, 36280, and 36293.

7/ Cadmium shall not be used in oxygen or potable water systems. Cadmium is prohibited from use in NAVSEA-owned shipboard systems in accordance with the requirements of T9070-AL-DPC-020/077-2, unless otherwise approved by NAVSEA. The use of cadmium plating for Army and Marine ground vehicles is prohibited unless otherwise explicitly stated in the contract as a requirement. Pin code J or KB may be substituted for cadmium (blank PIN code) for Army ground vehicle applications.

8/ Army and Marine ground vehicle applications. MIL-PRF-32647 Type KA is intended as a hazardous free plating material and is a direct replacement for zinc plating with hexavalent chromium conversion coating. Type KB is a hazardous free plating material and is a direct replacement for cadmium plating. KA and KB plating's have equivalent torque/tension behavior as the plating they replace.

9/ Titanium shall not be used in oxygen or potable water systems.

Maximum operating pressure. Maximum operating pressure shall be in accordance with MIL-DTL-32480.

Part or Identifying Number (PIN): The PIN consists of the letter M, the basic specification number, the specification sheet number, fitting dash size, and a letter for the material finish designator.

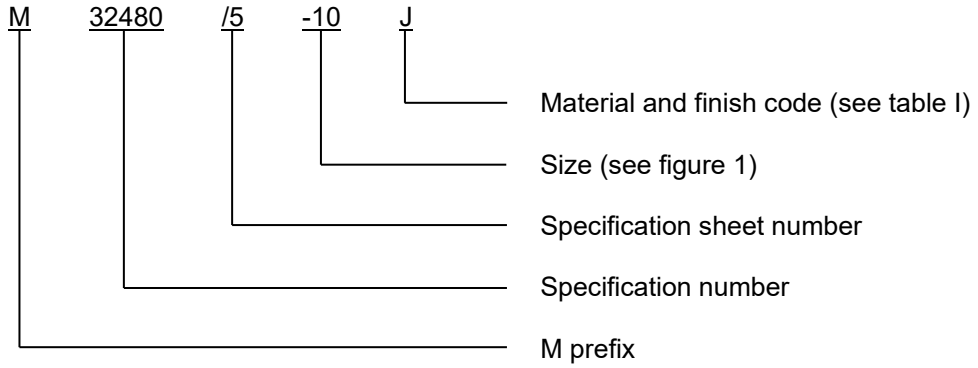

PIN example: M32480 /5-10J indicates a 45°, male, adapter, .6250 inch (15.875 mm), steel with zinc-nickel finish.

O-ring is not supplied. Order separately, see MIL-DTL-25988.

Cadmium is not recommended. To the users of this document, it is recommended that the use of carbon steel material with cadmium plating be used only when other materials and finishes specified in this document cannot meet performance requirements.

Cadmium is prohibited from use in NAVSEA owned shipboard systems in accordance with the requirements of T9070-AL-DPC-020/077-2.

For new designs PIN codes Blank, P, Z, and ZC are not to be supplied to Army and Marine ground vehicles.

Class I and II ODS shall not be used in MIL-DTL-32480/5 or any referenced procedures.

Order of precedence. Unless otherwise noted herein or in the contract, in the event of a conflict between the text of this document and the references cited herein, the text of this document takes precedence. Nothing in this document, however, supersedes applicable laws and regulations unless a specific exemption has been obtained.

Amendment notations. The margins of this specifications are marked with vertical lines to indicate where changes form the previous issue were made. This was done as a convenience only and the Government assumes no liability whatsoever for any inaccuracies in these notations. Bidders and contractors are cautioned to evaluate the requirements of this document based on the entire content irrespective of the marginal notations and relationship to the previous issue.

Referenced documents. In addition to MIL-DTL-32480, this document references the following:

MIL-DTL-16232	SAE-AMS2486
MIL-DTL-25988	SAE-AMS2488
MIL-PRF-32647	SAE-AMS2700
ASTM B117	SAE-AS4375
ASTM B633	SAE AS8879
ASTM B695	SAE-J514
ASTM F1136/F1136M	SAE J515
ASTM MNL37	SAE J1453-1
SAE-AMS-C-81562	SAE J1453-3
SAE-AMS-QQ-P-416	SAE J1545-3
SAE-AMS-STD-595	T9070-AL-DPC-020/077-2
SAE-AMS2417	

CONCLUDING MATERIAL

Custodians:
Army - AT
Navy - AS
Air Force - 71
DLA - CC

Review activities:
Army - AR
Navy - CG, MC, SA, SH

Preparing activity:
DLA - CC

(Project 4730-2023-074)

NOTE: The activities listed above were interested in this document as of the date of this document. Since organizations and responsibilities can change, you should verify the currency of the information above using the ASSIST Online database at https://assist.dla.mil.