INCH-POUND

MIL-DTL-32372/12B
w/AMENDMENT 1
17 October 2023
SUPERSEDING
MIL-DTL-32372/12B
23 May 2019

DETAIL SPECIFICATION SHEET

FITTING, ADAPTER, TEE, HYDRAULIC AND PNEUMATIC, NPTF MALE ON BRANCH TO ORFS MALE RUN TO RUN

This specification is approved for use by all Departments and Agencies of the Department of Defense.

The requirements for acquiring the product described herein shall consist of this specification sheet and MIL-DTL-32372.

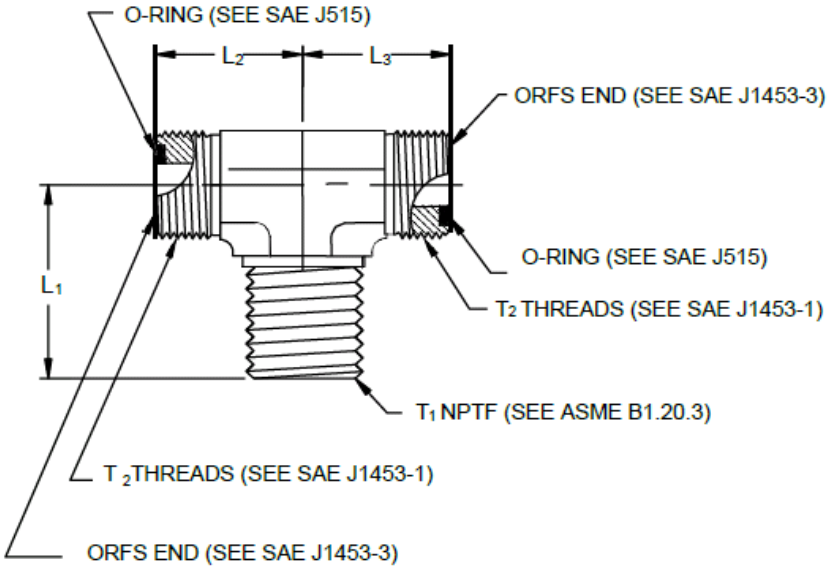

Dash size	Tube OD nom. inches (mm)	T1 NPTF ASME B1.20.3	T2 ORFS SAE J1453-1
-4	.250 (6.35)	1/4 - 18	9/16 - 18
-6	.375 (9.53)	1/4 - 18	11/16 - 16
-8	.500 (12.7)	1/2 - 14	13/16 - 16
-10	.625 (15.88)	1/2 - 14	1 - 14
-12	.750 (19.05)	3/4 - 14	1 3/16 - 12
-16	1.000 (25.40)	1 7/16 - 12	1 7/16 - 12
-20	1.250 (31.75)	1 11/16 - 12	1 11/16 - 12
-24	1.500 (38.10)	1 1/2 - 11 1/2	2 - 12

See notes at end of figure.

FIGURE 1. Adapter, male tee, ORFS run to run to NPTF on branch.

DISTRIBUTION STATEMENT A. Approved for public release; distribution is unlimited.

Dash size	D ID inches (mm)	L1 ±.030 (0.8) inches (mm)	L2 ±.030 (0.8) Inches (mm)	L3 ± .030 (0.8) Inches (mm)
-4	.172 ±.003 (4.4 ±0.08))	.780 (20)	.846 (21.5)	.846 (21.5)
-6	.297 ±.004 (7.5 ±0.10)	1.09 (28)	.984 (25.0)	.984 (25.0)
-8	.391 ±.004 (9.9 ±0.10)	1.22 (31)	1.10 (28.0)	1.10 (28.0)
-10	.484 ±.004 (12.3 ±0.10)	1.47 (37)	1.32 (33.5)	1.32 (33.5)
-12	.609 ±.005 (15.5 ±0.13)	1.59 (40)	1.48 (37.5)	1.48 (37.5)
-16	.844 +.007/-.005 (21.4 ±0.13)	1.97 (50)	1.63 (41.5)	1.63 (41.5)
-20	1.078 +.008/-.005 (27.4 +0.20/-0.13)	2.38 (60)	1.75 (44.5)	1.75 (44.5)
-24	1.312 +.010/-.005 (33.3 ±0.25/-0.13)	2.64 (67)	1.93 (49.0)	1.93 (49.0)

NOTES:
1. Dimensions are in inches.
2. Metric equivalents are given for information only.
3. Break all sharp edges and remove all burrs and slivers.
4. Dimensions and tolerances not shown shall be in accordance with ASME B1.20.3 for NPTF end and SAE J1453-1 for ORFS end.
5. For dimensions not shown, see SAE J1453-1, SAE J1453-3, or ASME B1.20.3.

FIGURE 1. Adapter, male tee, ORFS run to run to NPTF on branch - Continued.

REQUIREMENTS

Fitting configuration and dimensions shall be as specified on Figure 1. Materials and finishes shall be in accordance with MIL-DTL-32372.

Finish. Finishes shall be in accordance with Table I.

All plating's shall be capable of meeting 96-hour salt spray test in accordance with ASTM B117. The fittings shall show no evidence of red corrosion after 96 hours of salt spray. Fluid passages, other openings, and internal threads shall not be subject to the plating thickness requirement and may have bare areas provided they are protected with a light film of oil.

Maximum operating pressure. Maximum operating pressure shall be in accordance with MIL-DTL-32372.

TABLE I. Material and finish identification codes.

PIN code material/plating finish	Material	Plating finish
Blank	Steel	Cadmium plating in accordance with SAE-AMS-C-81562, type II, class 3 or SAE-AMS-QQ-P-416, type II, class 2. 1/ 6/
H	Steel	Zinc-aluminum in accordance with ASTM F1136/F1136M, grade 3, NC.
J	Steel	Zinc-nickel in accordance with SAE-AMS2417, type 2, grade B. 2/
M	Nickel-copper alloy UNS N04400	No additional finish.
N	High-chromium nickel alloy UNS N06690	No additional finish.
P	Steel	Zinc phosphate finish in accordance MIL-DTL-16232 type Z, class 1. 3/
Q	Steel	Zinc plating in accordance with ASTM B633, type III, Fe/Zn 8. 3/ 4/
R	Steel	Zinc plating in accordance with ASTM B633, type V, Fe/Zn 8. 3/
S	Corrosion resistant steel	No additional finish. Passivation in accordance with SAE-AMS2700, method 1, type 6 or 7.
T	Titanium	Anodize in accordance with SAE-AMS2488 type 2. 5/ 7/
TF	Titanium	Fluoride phosphate in accordance with SAE-AMS2486. 5/ 7/
Z	Steel	Zinc plating in accordance with ASTM B695, type II, class 8. 3/ 4/
ZC	Steel	Zinc may be any zinc plating from PIN codes J, Q, and Z with a colored chromate coating. 3/ 4/

1/ Embrittlement test need not be run
2/ The zinc-nickel alloy plate shall contain 12% to 16% nickel. The coating thickness shall be 315µ inches (8µm) minimum.
3/ Not for use in aircraft. Requires approval from the Program Office for all applications. Zinc-plated materials should be avoided in hydraulic systems with water-glycol fluids. Reference ASTM MNL37 - Fuels and Lubricants Handbook.
4/ These finishes have a chromate conversion coating or chromic acid rinse which includes hexavalent chromium and are not recommended.
5/ A pretreatment, a modification of the fluoride treatment, or a post treatment shall be applied so the final color of the fittings shall be similar to SAE-AMS-STD-595 colors 36076, 36081, 36099, 36118, 36134, 36152, 36170, 36173, 36176, 36231, 36251, 35270, 36280, and 36293..
6/ Cadmium shall not be used in oxygen or potable water systems. Cadmium is prohibited from use in NAVSEA-owned shipboard systems in accordance with the requirements of T9070-AL-DPC-020/077-2, unless otherwise approved by NAVSEA.
7/ Titanium shall not be used in oxygen or potable water systems.

Further information on materials and finishes can be found in MIL-DTL-32372.

PIN: The PIN consists of the letter M, the basic specification number, the specification sheet number, a number for fitting size, and a letter for the material finish designator.

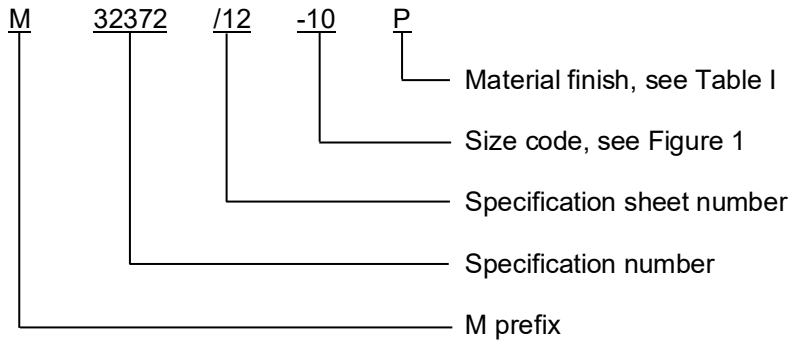

PIN example: M32372/12-10P indicates a tee adapter, fitting, .625 inch tube OD, steel with zinc phosphate finish.

O-ring is not supplied. Order separately, in accordance with SAE-J515.

Cadmium is not recommended. To the users of this document, it is recommended that the use of carbon steel material with cadmium plating be used only when other materials and finishes specified in this document cannot meet performance requirements.

Cadmium is prohibited from use in NAVSEA-owned shipboard systems in accordance with the requirements of T9070-AL-DPC-020/077-2, unless otherwise approved by NAVSEA.

Class I and II ozone depleting substances (ODS) shall not be used in MIL-DTL-32372/12 or any referenced procedures.

Referenced documents shall be of the issue in effect on date of invitations for bid.

Amendment notations. The margins of this specification are marked with vertical lines to indicate modifications generated by this amendment. This was done as a convenience only and the Government assumes no liability whatsoever for any inaccuracies in these notations. Bidders and Contractors are cautioned to evaluate the requirements of this document based on the entire content irrespective of the marginal notations.

Referenced documents. In addition to MIL-DTL-32372, this document references the following:

MIL-DTL-16232	SAE-AMS-STD-595
ASME B1.20.3	SAE AMS2417
ASTM B117	SAE-AMS2486
ASTM B633	SAE-AMS2488
ASTM B695	SAE-AMS2700
ASTM F1136/F1136M	SAE J1453-1
ASTM MNL37	SAE J1453-3
SAE-AMS-C-81562	SAE-J515
SAE-AMS-QQ-P-416	T9070-AL-DPC-020/077-2

CONCLUDING MATERIAL

Custodians:
Army - AR
Navy - SH
Air Force - 71
DLA - CC

Preparing activity:
DLA - CC

(Project 4730-2023-094)

Review activities:
Army - AT, GL
Navy - AS, SA, YD
Air Force - 11

NOTE: The activities listed above were interested in this document as of the date of this document. Since organizations and responsibilities can change, you should verify the currency of the information above using the ASSIST Online data at https://assist.dla.mil.