INCH-POUND

MIL-DTL-32234A
W/AMENDMENT 1
18 July 2024
SUPERSEDING
MIL-DTL-32234A
16 May 2019

DETAIL SPECIFICATION

CONNECTORS, ELECTRICAL, ULTRA HIGH DENSITY, MODULAR, BLADE AND FORK, EIGHT ROW, GENERAL SPECIFICATION FOR

This specification is approved for use by all Departments and Agencies of the Department of Defense.

1. SCOPE

1.1 Scope. This specification covers the detail requirements for ultra high density connectors, surface mounted on daughter board modules or fixed backplanes. The connector contacts are densely packed with .050 inch (1.27 mm) spacing between contact centers in the same row. These connectors are intended for use in assemblies requiring very densely packaged electronic components, and are commonly used in digital applications.

1.2 Part or Identifying Number (PIN). The PIN consists of the letter M (see 3.7) the basic specification number, a forward slash, a specification sheet number, a dash, a letter for the insulator material, a letter for the EMI/RFI shield, two numbers for the termination tail length or termination tail separation, a letter for the keying pin, a letter for contact sealing (when applicable), a letter for termination tail finish (when applicable), and a letter for space class (when applicable) (see 3.1) shown in the following example:

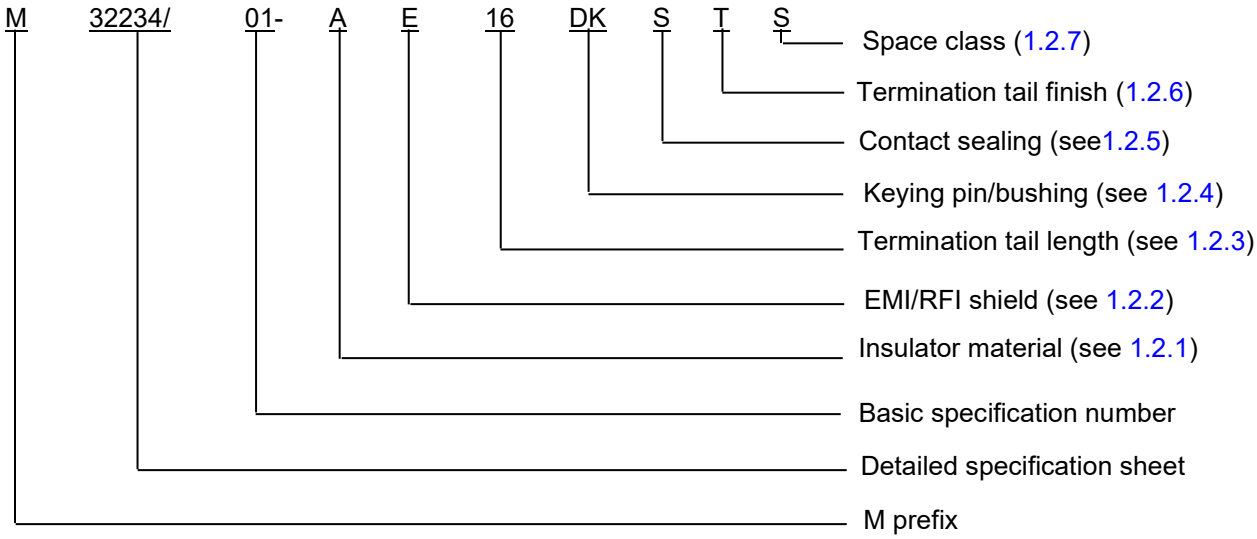

Comments, suggestions, or questions on this document should be addressed to Commander, Defense Supply Center Columbus, Attn: VAI, P.O. Box 3990, Columbus, Ohio, 43218-3990 or emailed to RectangularConnector@dla.mil. Since contact information can change, you may want to verify the currency of this address information using the ASSIST Online database at https://assist.dla.mil.

AMSC N/A FSC 5935
DISTRIBUTION STATEMENT A. Approved for public release; distribution is unlimited.

1.2.1 Insulator material. The PIN will utilize a single character (A, B, or C) to indicate the insulator plastic materials:

A - Thermoplastic, type GST-40F.
B - Thermoplastic, type GDI-30F.
C - Glass filled diallyl phthalate, type SDG-F or GLCP-30F.

1.2.2 EMI/RFI shield.

E - EMI/RFI shield
N - None included

1.2.3 Termination tail length or termination tail separation (gap). The PIN will utilize a number to identify the termination type. Each specification sheet will provide a chart which will identify available termination types and an associated code letter to include in the PIN.

1.2.4 Keying pin/bushing. The PIN will utilize two characters to identify the shape of the keying pin or bushing. Each specification sheet will provide a chart, which will identify available keying types and an associated code letter. When keying pins/bushings are supplied with the connector they will be shipped loose.

1.2.5 Contact sealing. Contact sealing will be identified as follows:

S - Connectors are sealed to prevent entry of cleaning fluids or conformal coatings into the contact area from the termination side of the connector.
N - No sealing is provided.

1.2.6 Termination tail finish. Termination plating will be identified as follows:

T - Tin/lead
G - Gold

1.2.7 Space class. The PIN will utilize a single character to identify space class connectors that have passed thermal vacuum outgassing testing.

Blank - Blank for non-space applications.
S - For space class.

2. APPLICABLE DOCUMENTS

2.1 General. The documents listed in this section are specified in sections 3 and 4 of this specification. This section does not include documents cited in other sections of this specification or recommended for additional information or as examples. While every effort has been made to ensure the completeness of this list, document users are cautioned that they must meet all specified requirements documents cited in sections 3 and 4 of this specification, whether or not they are listed.

2.2 Government documents.

2.2.1 Specifications standards, and handbooks. The following specifications, standards, and handbooks form a part of this document to the extent specified herein. Unless otherwise specified, the issues of these documents are those cited in the solicitation or contract.

FEDERAL STANDARDS

FED-STD-H28	-	Screw-Thread Standards for Federal Services.

DEPARTMENT OF DEFENSE SPECIFICATIONS

MIL-M-24519	-	Molding Plastics, Electrical, Thermoplastic.
MIL-PRF-5606	-	Hydraulic fluid, Petroleum Base; Aircraft, Missile, and Ordnance.
MIL-PRF-23699	-	Lubricating Oil, Aircraft Turbine Engine, Synthetic Base, NATO Code Number O-156.
MIL-DTL-25988	-	Rubber, Fluorosilicone Elastomer, Oil-and-Fuel Resistant, Sheets, Strips, Molded Parts, and Extruded Shapes
MIL-PRF-87257	-	Hydraulic Fluid, Fire Resistant; Low Temperature, Synthetic Hydrocarbon Base, Aircraft and Missile
MIL-DTL-5541	-	Chemical Conversion Coatings on Aluminum and Aluminum Alloys.
MIL-DTL-5624	-	Turbine Fuel, Aviation, Grades JP-5 (NATO F-44)

(See supplement 1 for list of specification sheets)

DEPARTMENT OF DEFENSE STANDARDS

MIL-STD-202-110	-	Method 110, Sand and Dust
MIL-STD-202-208	-	Method 208, Solderability
MIL-STD-202-210	-	Method 210, Resistance to Soldering Heat
MIL-STD-202-215	-	Method 215, Resistance to Solvents
MIL-STD-889	-	Galvanic Compatibility of Electrically Conductive Materials
MIL-STD-1285	-	Marking of Electrical and Electronic Parts.

(Copies of these documents are available online at https://quicksearch.dla.mil.)

2.3 Non-Government publications. The following documents form a part of this document to the extent specified herein. Unless otherwise specified, the issues of these documents are those cited in the solicitation or contract.

ASME INTERNATIONAL

ASME Y14.5	-	Dimensioning and Tolerancing

(Copies of these documents are available online at https://www.asme.org.)

ASTM INTERNATIONAL

ASTM A342/A342M	-	Standard Test Methods for Permeability of Feebly Magnetic Materials
ASTM A582/A582M	-	Standard Specification for Free-Machining Stainless Steel Bars
ASTM A967/A967M	-	Chemical Passivation Treatments for Stainless Steel Parts
ASTM B36/B36M	-	Standard Specification for Brass Plate, Sheet, Strip, and Rolled Bar
ASTM B194	-	Standard Specification for Copper-Beryllium Alloy Plate, Sheet, Strip, and Rolled Bar
ASTM B241/B241M	-	Standard Specification for Aluminum and Aluminum-Alloy Seamless Pipe and Seamless Extruded Tube
ASTM B487	-	Standard Test Method for Measurement of Metal and Oxide Coating Thickness by Microscopical Examination of a Cross Section
ASTM B488	-	Gold for Engineering Uses, Electrodeposited Coatings Of
ASTM B499	-	Standard Test Method for Measurement of Coating Thicknesses by the Magnetic Method: Nonmagnetic Coatings on Magnetic Basis Metals

ASTM B567	-	Standard Test Method for Measurement of Coating Thickness by the Beta Backscatter Method
ASTM B568	-	Standard Test Method for Measurement of Coating Thickness by X-Ray Spectrometry
ASTM B748	-	Ball Mill Test for Friability of Abrasive Grain, Procedure for
ASTM B768	-	Standard Specification for Copper-Cobalt-Beryllium Alloy and Copper-Nickel-Beryllium Alloy Strip and Sheet
ASTM D770	-	Standard Specification for Isopropyl Alcohol
ASTM D570	-	Standard Test Method for Water Absorption of Plastics
ASTM D4067	-	Standard Classification System for Reinforced and filled Poly (Phenylene Sulfide) (PPS) Injection Molding and Extrusion Materials Using ASTM Methods
ASTM D5138	-	Standard Specification for Liquid Crystal Polymers
ASTM D5948	-	Standard Specification for Molding Compounds, Thermosetting
ASTM E595	-	Standard Test Method for Total Mass Loss and Collected Volatile Condensable Materials from Outgassing in a Vacuum Environment
ASTM G21	-	Standard Practice for Determining Resistance of Synthetic Polymeric Materials to Fungi.

(Copies of these documents are available online at https://www.astm.org.)

ELECTRONIC INDUSTRIES ALLIANCE (EIA)

EIA-364	-	Electrical Connector/Socket Test Procedures Including Environmental Classifications
EIA-364-06	-	Contact Resistance Test Procedure for Electrical Connectors
EIA-364-09	-	Durability Test Procedure for Electrical Connectors and Contacts
EIA-364-10	-	Fluid Immersion for Test Procedure for Electrical Connectors and Sockets
EIA-364-13	-	Mating and Unmating Forces Test Procedure for Electrical Connectors
EIA-364-17	-	Temperature Life With or Without Electrical Load Test Procedure for Electrical Connectors and Sockets
EIA-364-20	-	Withstanding Voltage Test Procedure for Electrical Connectors, Sockets and Coaxial Contacts.
EIA-364-21	-	Insulation Resistance Test Procedure for Electrical Connectors, Sockets, and Coaxial Contacts.
EIA-364-23	-	Low Level Contact Resistance Test Procedure for Electrical Connectors and Sockets
EIA-364-26	-	Salt Spray Test Procedures for Electrical Connectors, Contacts and Sockets
EIA-364-27	-	Mechanical Shock (Specified Pulse) Test Procedures for Electrical Connectors
EIA-364-28	-	Vibration Test Procedure for Electrical Connectors and Sockets
EIA-364-29	-	Contact Retention Test Procedure for Electrical Connectors
EIA-364-31	-	Humidity Test Procedure for Electrical Connectors and Sockets
EIA-364-32	-	Thermal Shock (Temperature Cycling) Test Procedure for Electrical Connectors and Sockets
EIA-364-36	-	Test Procedure for Determination of Gas-Tight Characteristics for Electrical Connectors, Sockets and/or Contact Systems
EIA-364-37	-	Contact Engagement and Separation Force Test Procedure for Electrical Connectors.
EIA-364-66	-	EMI Shielding Effectiveness Test Procedures for Electrical Connectors
EIA-364-87	-	Nanosecond-Event Detection for Electrical Connectors, Contacts and Sockets
EIA-364-96	-	Plated Through Hole Integrity Test Procedure for Electrical Connectors

(Copies of these documents are available online at https://www.eia.org.)

IPC - ASSOCIATION CONNECTING ELECTRONICS INDUSTRIES

J-STD-004	-	Solder Fluxes Requirements for
J-STD-005	-	Solder Paste Requirements for
J-STD-006	-	Electronic Grade Solder Alloys and Fluxed and Non-Fluxed Solid Solders for Electronic Soldering Applications Requirements for

(Copies of these documents are available online at https://www.ipc.org.)

NCSL INTERNATIONAL

NCSL Z540.3	-	Laboratories Calibration and Measuring and Test Equipment

(Copies of these documents are available online at https://www.ncsli.org.)

SAE INTERNATIONAL

SAE-AS39029	-	Contacts, Electrical Connector, General Specification for
SAE-AS81021	-	Copper-Beryllium Alloy (Copper Alloy Numbers C17500 and C17510), Strip
SAE-AMS-QQ-A-200	-	Aluminum Alloy, Bar, Rod, Shapes, Structural Shapes, Tube and Wire, Extruded, General Specification For
SAE-AMS-QQ-A-200/8	-	Aluminum Alloy 6061, Bar, Rod, Shapes, Tube, and Wire, Extruded
SAE-AMS-QQ-A-225	-	Aluminum and Aluminum Alloy, Bar, Rod, Wire, or Special Shapes, Rolled, Drawn, or Cold Finish, General Specification For
SAE-AMS-QQ-N-290	-	Nickel Plating (Electrodeposited)
SAE-AMS-2402	-	Plating, Zinc
SAE-AMS-2404	-	Plating, Electroless Nickel
SAE-AMS-2700	-	Passivation of Corrosion Resistant Steels
SAE-AMS-5640	-	Steel, Corrosion-Resistant, Bars, Wire, and Forgings 18Cr-9.0N Free Machining
SAE EIA-557	-	Statistical Process Control Systems

(Copies of these documents are available online at https://www.sae.org.)

2.4 Order of precedence. Unless otherwise noted herein or in the contract, in the event of a conflict between the text of this document and the references cited herein (except for related specification sheets), the text of this document takes precedence. Nothing in this document, however, supersedes applicable laws and regulations unless a specific exemption has been obtained.

3. REQUIREMENTS

3.1 Specification sheets. The individual item requirements shall be as specified herein and in accordance with the applicable specification sheet. In the event of any conflict between the requirements of this specification and the specification sheets, the latter shall govern.

3.2 First article. When specified (see 6.2), a sample shall be subjected to first article inspection in accordance with 4.4.

3.2.1 Quality.

3.2.1.1 Statistical process control (SPC). The manufacturer shall establish a SPC system that meets the requirements of SAE EIA-557.The contractor shall implement and use statistical process control (SPC) techniques in the manufacturing of parts covered by this specification. Where SPC cannot be utilized because of non-continuous production, a lot sampling plan for inspection with C = 0 (accept on zero defects) may be utilized. Dimensioning and tolerancing shall be in accordance with ASME Y-14.5M.

3.3 Materials. Materials shall be as identified herein or as approved by the Government. However, when a definite material is not specified, a material shall be used which will enable the connectors to meet the requirements of this specification. Acceptance or approval of any constituent material shall not be construed as a guarantee of acceptance of the finished product.

3.3.1 Reference critical interface, materials, platings and processes. The interface, materials, platings, and processes identified in this specification are intended to assure electrical and mechanical compatibility, eliminate problems of electrochemical contamination of critical electrical and mechanical interfaces, and minimize interface surface wear. Manufacturers of connectors supplied to this specification may use alternate industry recognized standards for materials, platings, and processes, provided prior approval is granted by the Government. The use of such alternatives shall not result in connectors with inferior short or long-term performance or reliability.

3.3.2 Recycled, recovered, environmentally preferable, or biobased materials. Recycled, recovered, environmentally preferable, or biobased materials should be used to the maximum extent possible, provided that the material meets or exceeds the operational and maintenance requirements, and promotes economically advantageous life cycle costs.

3.3.3 Dissimilar metals. When dissimilar metals are used in intimate contact with each other, protection against electrolysis and corrosion shall be provided. Dissimilar metals such as brass, copper or steel (except corrosion-resisting steel passivated in accordance with SAE-AMS-2700) (see 3.3.1) shall not be used in intimate contact with aluminum or aluminum alloy. Protective measures for dissimilar metals shall be in accordance with MIL-STD-889.

3.3.4 Material requirements.

3.3.4.1 Materials permeability. All materials used in construction of connectors and associated hardware shall be of low magnetic permeability, enabling complete connector pairs to meet permeability requirements of less than 2μ when using an indicator in accordance with ASTM A342/A342M.

3.3.4.2 Material fungus resistance. Materials used in the construction of these connectors shall be fungus inert in accordance with ASTM G21. There shall be no evidence of fungus growth on the external surfaces.

3.3.4.3 Hydrolytic stability. All nonmetallic material shall be hydrolytic reversion resistant in accordance with ASTM D570.

3.3.4.4 Flux. When flux is used, it shall be rosin mildly activated (RMA), paste or liquid, in accordance with J-STD-004, J-STD-005, or J-STD-006.

3.3.4.5 Pure tin. The use of pure tin, as an underplate or final finish, is prohibited both internally and externally. Tin content of connector components and solder shall not exceed 97 percent, by mass. Tin shall be alloyed with a minimum of 3 percent lead, by mass (see 6.3).

3.3.5 Contact material.

3.3.5.1 Tuning fork contact material. Tuning fork contacts shall be beryllium copper in accordance with ASTM B194, SAE AS81021 alloy UNS-C-17200 or ASTM B768 alloy UNS-C-17410, heat treated to ½ to ¾ hard condition.

3.3.5.1.1 Tuning fork contact finish. Tuning fork contacts shall be plated with gold in accordance with ASTM B488 type II, code C, class 1.27 (50 microinches) min over 50 to 100 microinches (1.27 to 2.54μm) of low stress nickel in the area of the female tuning fork where it engages with the male blade. The remaining area of the tuning fork shall be gold plated in accordance with ASTM B488 type II, code C, class 0.76 (30 microinches) min of gold over 50 to 100 microinches of low stress nickel in accordance with
SAE-AMS-QQ-N-290, class I (see figure 1). Verification of plating thickness shall be measured in accordance with 4.8.3. See figure 1 for contact mating surface on a tuning fork.

3.3.5.2 Termination tails finish (tin-lead). The contact termination tails may have tin-lead reflowed over the tails. Tin lead finishes are not suitable for wire wrap applications. Selectively plated contacts shall have a transition area of nickel between the gold or tin-lead plating to avoid overlap and resultant embrittlement. Verification of plating thickness shall be measured in accordance 4.8.3.

3.3.5.3 Male blade contact material. Blade contacts shall be brass composition alloy number 260, half hard minimum, in accordance with ASTM B36/B36M.

3.3.5.3.1 Male blade contact finish. Male blade contacts shall be plated with gold in accordance with ASTM B488 type II, code C, class 1.27 (50 microinches) min over 50 to 100 microinches (1.27 to 2.54 μm) minimum of low stress nickel in accordance with SAE-AMS-QQ-N-290, class I over the entire contact blade with selective reflowed tin-lead over the contact termination tails. The plating transition areas shall not be allowed in the exposed length of the contact blade or exposed portion of the contact termination tail area (transition area shall lie within the insulator body). Verification of plating thickness shall be measured in accordance 4.8.3.

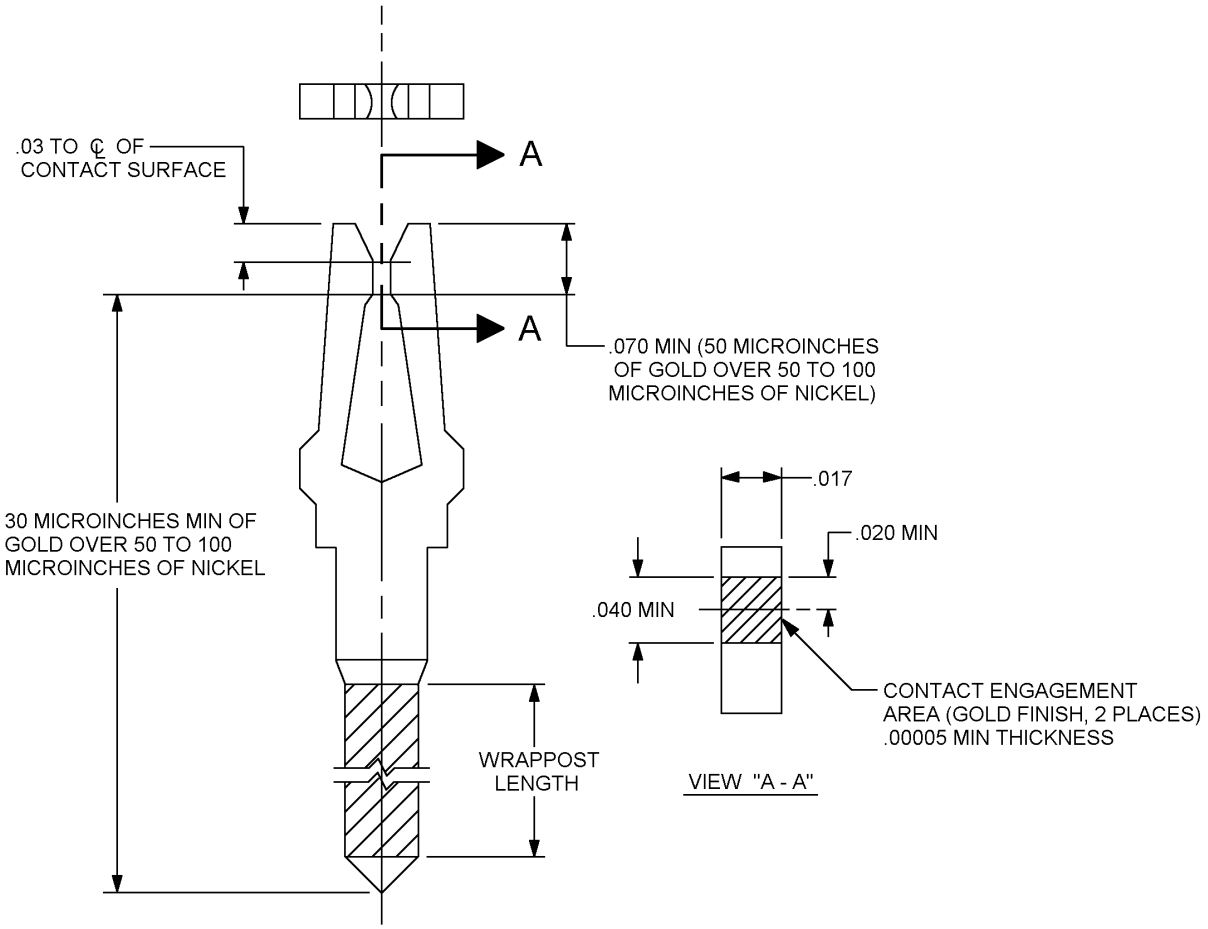

Inches	mm
30μ	0.76μm
50μ	1.27μm
100μ	2.54μm
.020	0.51
.025	0.63
.03	0.76
.040	1.02

NOTES:
1. Dimensions are in inches.
2. Metric equivalents are given for information only.
3. Unless otherwise specified tolerances for 2 place decimals is ±.01 inch (0.3 mm), 3 place decimals is ±.005 inch (0.13 mm).

FIGURE 1. Tuning fork localized finish.

3.3.6 Insulator material. Insulators shall be molded from high strength, high heat deflection temperature materials capable of withstanding high temperature soldering techniques such as vapor phase or infrared. Connector plastic materials shall meet the requirements as follows:

a. Thermoplastic, type GST-40F in accordance with MIL-M-24519, or ASTM D4067.
b. Thermoplastic, type GLCP-30 F in accordance with MIL-M-24519, or ASTM D5138.
c. Glass filled diallyl phthalate type SDG-F or GDI-30F in accordance with ASTM D5948.

3.3.7 Shell and ancillary hardware materials.

3.3.7.1 Connector shell material. The connector shell (frame) shall be fabricated from aluminum 6061-T6 in accordance with SAE-AMS-QQ-A-200/8 or ASTM B241/B241M.

3.3.7.1.1 Connector shell finish. The connector shell shall be nickel-plated overall in accordance with SAE-AMS-2404, 9 to 12 percent phosphorus 300 to 1000 microinches (7.62 to 24.5 μm) thick.

3.3.7.2 Ancillary hardware material. Ancillary hardware material shall be fabricated from aluminum in accordance with SAE-AMS-QQ-A-200 or SAE-AMS-QQ-A-225 with appropriate surface treatment in accordance with MIL-DTL-5541, class 3.

3.3.7.2.1 Screw threads. Ancillary hardware screw threads shall be in accordance with FED-STD-H28.

3.3.8 Guide, ground pins, and polarizing key.

3.3.8.1 Guide or ground pins. Guide or ground pins and other mounting screws, nuts, etc. shall be fabricated from corrosion-resisting steel in accordance with SAE-AMS-5640 or ASTM A582/A582M with surface treatment in accordance with SAE-AMS-2700 or ASTM A967/967M.

3.3.8.2 Polarizing key material. The key pin shall be stainless steel in accordance with ASTM A582/A582M, 300 series, low magnetic permeability.

3.3.8.2.1 Polarizing key finish. The polarizing key finish shall be passivated in accordance with SAE-AMS 2700.

3.3.9 Interfacial seals. Interfacial seals, when specified, shall be molded from fluorosilicone elastomeric material or similar blend meeting the requirements of MIL-DTL-25988, type II, class 3.

3.3.10 Contact sealants. Sealants used to back seal contact cavities to prevent entry of cleaning solutions, conformal coatings, etc., shall be capable of meeting the requirements of this specification.

3.3.11 Adhesives. Adhesives (epoxies) used to bond insulator assemblies to insulator assemblies and insulator assemblies to the shell shall be capable of meeting the requirements of this specification. For space applications see 6.4.

3.3.12 EMI shield. The EMI shield shall be constructed from beryllium copper in accordance with ASTM B194 or ASTM B768.

3.3.12.1 EMI shield finish. The EMI shield finish shall be nickel 25 to 100 microinches (0.64 to 2.54μm) thick in accordance with SAE-AMS-2404.

3.4 Design performance requirements.

3.4.1 Contact design.

a. Contacts shall be designed to provide multiple contact points (2 or more) at all possible interconnect positions of the connector mating halves, within limits of the engagement design parameters.
b. Contact wipe. All contacts shall have a contact wipe of .020 inch (0.51 mm) minimum prior to connector halves arriving at their fully mated position.
c. Contact termination for surface mounting.
   (1) Contacts intended for surface mounting shall be profiled to function with the mounting pad geometric as specified in the applicable requirements drawing.
   (2) Each contact termination center line shall be within ±.004 inch (0.10 mm) from the specified centerline position.
   (3) Contact termination tails shall be coplanar within ±.005 inch (0.13 mm) at the solder point, except for straddle mount connector types.
d. Contact terminations for through hole mounting.
   (1) Contact termination centerlines for through hole terminated contacts shall be within ±.004 inch (0.10 mm) from the specified centerline position.
   (2) Termination tail ends shall be coplanar within ±.010 inch (0.25 mm) centered about the specified termination tail end plane position.
e. Signal contacts: Signal contacts shall be capable of conducting 1.5 amperes on a continuous basis, and exhibit no evidence of material deterioration or performance degradation.

3.4.2 Durability. Connector pairs shall be capable of withstanding 500 mating and unmating cycles without performance when tested in accordance with 4.8.6.

3.4.3 Contact engagement and separating forces The contact engagement and separating forces and tuning fork member contact normal force shall be tested as specified in 4.8.4. Unless otherwise specified for nonshielded signal contact, the maximum average engagement force shall not exceed 3.0 ozf (0.83 newtons). The minimum separation force shall be 0.5 ozf (0.12 newtons) or 13% of the maximum engagement force as specified in the detail specification sheets.

3.4.4 Current overload. The contacts shall meet the current overload specified in 4.8.21. Signal and power contacts and inserts shall exhibit no evidence of material deterioration or performance degradation.

3.4.5 Contact resistance and low level contact resistance.

3.4.5.1 Contact resistance and low level contact resistance (signal contacts). When tested as specified in 4.8.14 mated pairs shall have a maximum voltage drop of 30 millivolts when conducting 1 ampere and the low level contact resistance shall be no more than 30 milliohms when conducting 10 milliamperes.

3.4.5.2 Compliant pin termination resistance. The termination resistance between the compliant pin element and the compliant pin contact hole shall not exceed 1.0 milliohms maximum when tested in accordance with 4.8.17.

3.4.5.3 Ground pin resistance. Mounting plate to contact resistance shall result in a voltage drop between the mounting plate and grounding contact not to exceed 20 millivolts when tested in accordance with 4.8.15.

3.4.6 Contact inductance. Mated contacts shall have inductance no greater than 16 nanohenrys when measured from the contact termination points on the mating contacts.

3.4.7 EMI shielding. When tested in accordance with 4.8.22, the EMI shielding effectiveness shall be within the values listed on table I.

TABLE I. EMI shielding effectiveness.

Frequency MHz	Leakage attenuation (db) minimum
100 200 300 400 800 1,000 1,500 2,000 3,000 4,000 6,000 10,000	40dB

3.4.8 Solderability. All solder connections shall meet the testing specified in 4.8.32.

3.4.9 Insulator performance.

3.4.9.1 Insulation resistance. The connector insulator shall provide contact to contact insulation and contact to connector shell resistance of no less than 1,000 megohms prior to humidity conditioning and not less than 500 megohms after conditioning (2 hours drying) as specified in 4.8.19.

3.4.9.2 Withstanding voltage. The insulator shall show no evidence of electrical breakdown when subjected to the voltages specified in 4.8.20.1 and 4.8.20.2 as applicable.

3.4.9.3 Contact retention. When tested in accordance with 4.8.7 printed circuit board terminated contacts shall have a contact retention value of 3 pounds (1.36 kg) minimum.

3.4.9.4 Compliant pin insulator block retention. Contact retention within the connector insulator body for compliant pins which have their insulator body installed over the compliant pin field, and previously inserted into printed circuit boards (such as backplanes), shall have an average retention force of no less than 6 ounces (170 grams) per contact when tested in accordance with 4.8.8.

3.4.9.5 Compliant pin termination retention. Compliant pins inserted in a compliant pin termination eyelet as specified herein shall exhibit a retention force of 3.5 lbf (15.6 newtons) minimum when tested in accordance with 4.8.9 or 4.8.11.

3.4.9.6 Compliant pin plated through hole integrity. When tested as specified in 4.8.9 or 4.8.10, the insertion and removal of up to three virgin contacts in a plated through hole (see figure 2) will not result in the following:

a. The formation of a radius of deformation of more than .0015 inch (38.1 μm) average or a radius of .002 inch (50.8 μm) absolute measured from the drilled hole when tested in accordance with 4.8.11.
b. There shall be no evidence of physical damage such as pad lifting, cracked barrels, stretched or cracked interlayers, cracked pins, etc.
c. There shall be evidence of copper plating between the compliant section and the plated thru hole. Breakthrough of the tin plating shall not be considered a failure.

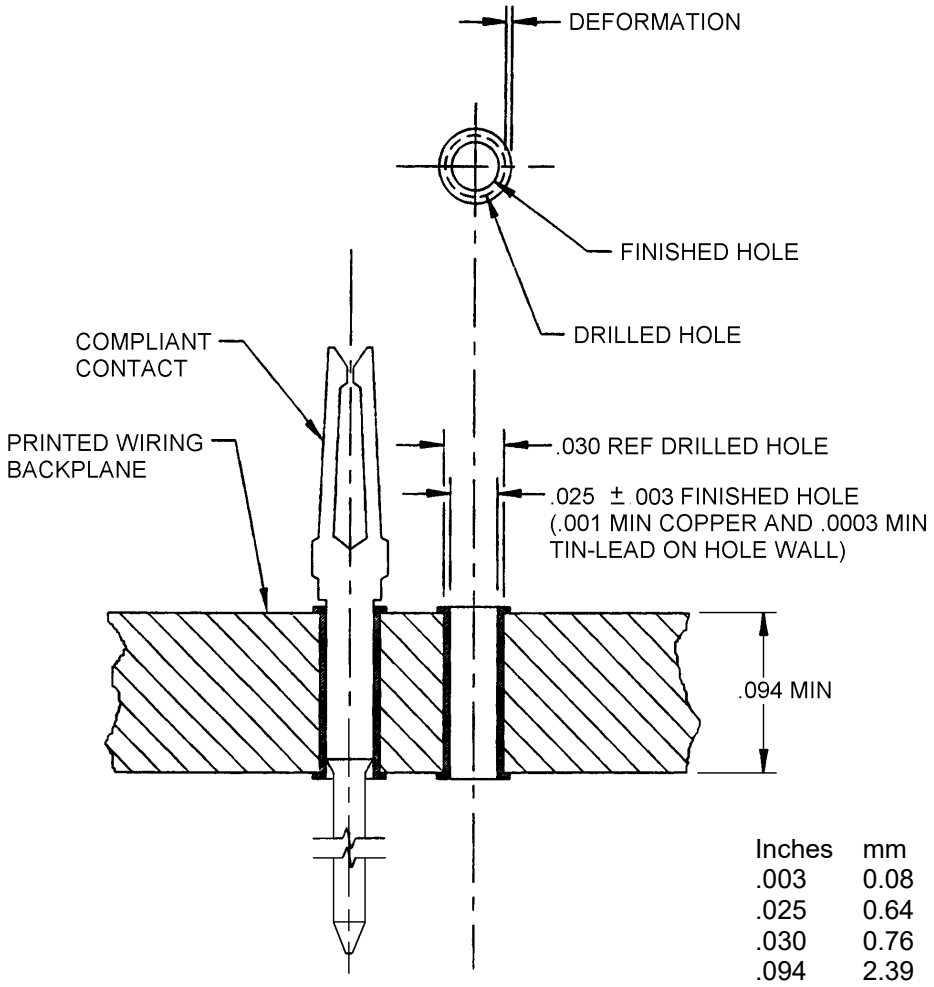

NOTES:
1. Dimensions are in inches.
2. Metric equivalents are given for information only.
3. Unless otherwise specified tolerance is ±.005 inch (0.13 mm).

FIGURE 2. Plated-through hole deformation.

3.4.10 Connector shell performance.

3.4.10.1 Connector shell durability. The connector shell shall be capable of withstanding impact, shock and vibration in 3.5.2 and 3.5.3 without evidence of deterioration such as warping, cracking or other deformation.

3.4.10.2 Shell to shell or shell to ground plane. Connector shells when mated with grounding pins or other inner shell shall exhibit no more than 5 milliohms resistance shell to shell or shell to grounding plane when tested in accordance with 4.8.16.

3.4.10.3 Module displacement force. When tested as specified in 4.8.5 , the module connector shall require no more than 75 pounds (34 kg) to displace the connector frame .003 inch (76.2 μm) for single-sided mounting ears (non-float mount) and .006 inch (0.15 mm) for double-sided mounting ears (float mount) in either direction. No degradation of performance is allowed after this test.

3.4.11 Guide pin performance.

3.4.11.1 Alignment capability. Guide pins, if provided, shall be capable of aligning mating connector halves which are initially misaligned by up to .030 inch (0.76 mm) in any radial dimension from the optimum mating position. Guide pins shall have completed the alignment function before connector halves initiate mating.

3.4.11.2 Guide pin pullout. Guide pins shall withstand a force of 10 lbf (44.5 N) minimum applied axially in the pullout direction without evidence of displacement within the connector shroud when tested in accordance with 4.8.12.2.

3.4.11.3 Guide bushing pushout/pullout. Guide bushings shall withstand a force of 10 lbf (44.5 N) applied in the pushout direction without evidence of displacement within the connector insulator block when tested in accordance with 4.8.12.3.

3.4.12 Guide pin and ground pin integrity. Guide pins or grounding pins when supplied as an integral part of the connector shall be capable of withstanding cantilever loads of 15 lbf (66.7 N) without evidence of tilt or bendover when tested in accordance with 4.8.12.1.

3.4.13 Polarizing key performance.

3.4.13.1 Polarizing key pullout. Polarizing keys shall withstand a force of 10 lbf (44.5 N) applied axially in the pullout direction without evidence of damage to the insulator or shell when tested in accordance with 4.8.13.1.

3.4.13.2 Polarizing key pushout. Polarizing keys shall withstand a force of 40 lbf (178 N) applied axially in the pushout direction without evidence of damage to the insulator or shell when tested in accordance with 4.8.13.1.

3.4.13.3 Polarizing bushing pushout/pullout. The polarizing bushing shall withstand a force of 5 lbf (22.2 N) applied axially in the pushout direction without evidence of displacement in the insulator block when tested in accordance with 4.8.12.3.

3.4.13.4 Polarizing key cantilever load. When tested in accordance with 4.8.13.2 the polarizing key shall be capable of withstanding a cantilever load of 10 pounds (4.54 kg) minimum without evidence of damage to the insulator or shell.

3.4.13.5 Polarizing key torque. When tested in accordance with 4.8.13.3, polarizing keys shall not yield sufficiently to allow mis-keying with 20 inch ounces (0.14 N-m Newton meter) of torque is applied to keys in their normal keying positions.

3.4.13.6 Polarizing bushing rotational stability. When tested in accordance with 4.8.13.4, polarizing bushings shall not yield from the installed keying position sufficiently to allow mis-keying with 3.5 lbf-in (0.40 N-m) of torque.

3.4.13.7 Keying positions. See figure 3 for D and V keying pin and keying bushing clock positions.

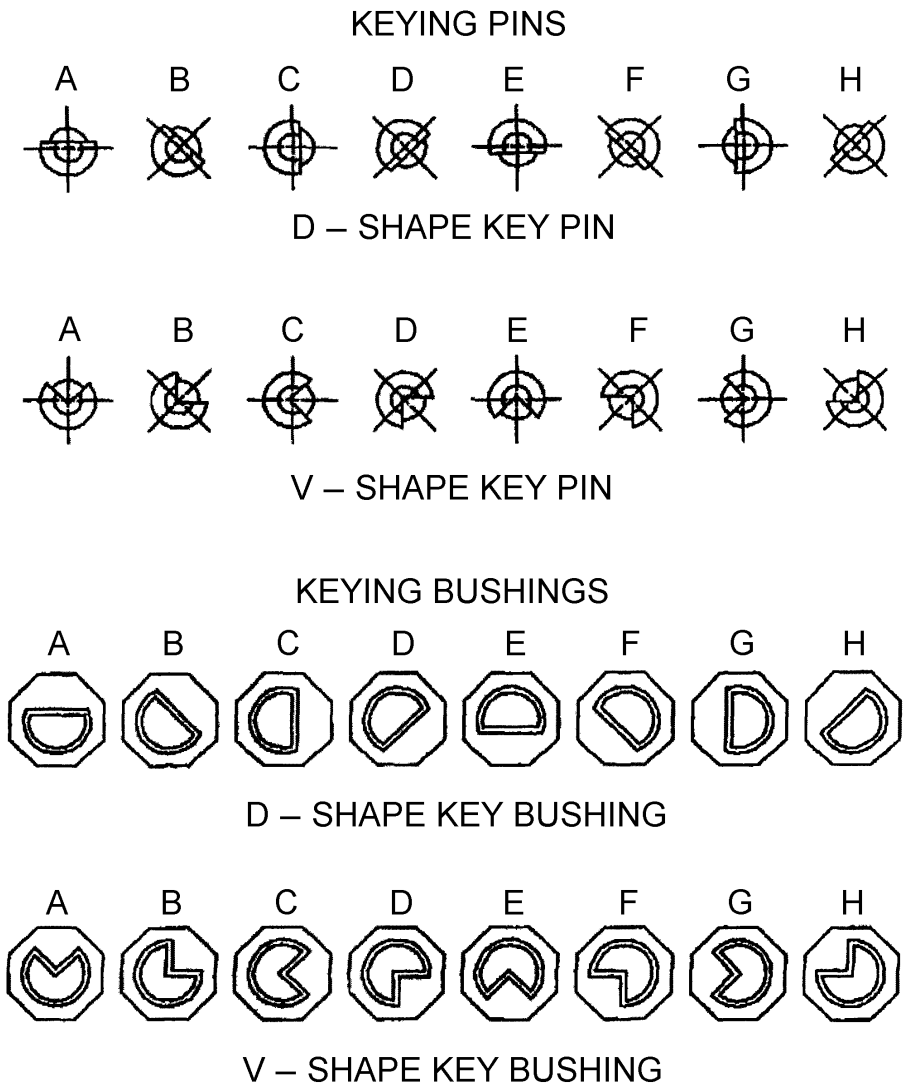

FIGURE 3. Keying positions.

3.5 Environmental performance requirements.

3.5.1 Temperature cycling. When tested in accordance with 4.8.23, mated and unmated connectors shall exhibit no evidence of damage detrimental to the operation of the connector, and shall pass succeeding tests in the testing sequence.

3.5.2 Vibration. When tested in accordance with 4.8.24, the connector shall exhibit no change in resistance of 10 ohms which lasts longer than 10 nanoseconds. The connector shall show no evidence of material yield, contact termination integrity degradation, or termination or contact member dislocation affecting operational integrity, and shall be capable of passing succeeding tests in the testing sequence.

3.5.3 Shock. When tested in accordance with 4.8.25, the connector shall exhibit no change in resistance of 10 ohms which lasts longer than 10 nanoseconds. The connector shall show no evidence of material yield, contact termination degradation or contact dislocation affecting operational integrity, and shall be capable of passing succeeding tests in the testing sequence.

3.5.4 Salt spray When tested in accordance with 4.8.26, mated connectors and unmated connectors (with protective covers if specified) shall pass succeeding test in the testing sequence.

3.5.5 Humidity. When tested in accordance with 4.8.27, mated connectors and unmated connectors (with protective covers if specified) shall pass succeeding tests in the testing sequence.

3.5.6 Temperature life. When tested in accordance with 4.8.28, mated connectors and unmated connectors (with protective covers if specified) shall exhibit no visual evidence of physical degradation and shall pass succeeding test in the testing sequence.

3.5.7 Gas tightness. When tested in accordance with 4.8.29, contacts shall pass the low level contact resistance test specified in 3.4.5.1.

3.5.8 Sand and dust conditions. When tested in accordance with 4.8.30, mated connectors and unmated connectors with protective covers installed shall pass succeeding tests in the test sequence.

3.6 Material performance requirements.

3.6.1 Fluid immersion. When tested in accordance with 4.8.31, the connectors shall meet the connector mating and unmating force requirements. The connector assemblies shall be visually inspected for swelling, cracking, pitting and loss of bonding adhesives or sealing elastomers.

3.6.2 Resistance to solder heat. When tested in accordance with 4.8.33, the connector shall show no degradation of the plastic, bonding adhesives, or sealing elastomers, and no evidence of deteriorating or deforming.

3.6.3 Thermal vacuum outgassing (space classes only). When tested in accordance with 4.8.35, the connector assembly shall have maximum total mass loss (TML) of 1.0 percent of the original specimen mass, and shall have a maximum volatile condensable material (VCM) content of 0.1 percent of the original specimen mass.

3.6.4 Marking performance. Connector marking shall remain permanent and legible when tested in accordance with 4.8.34.

3.7 Marking. Marking shall be in accordance with MIL-STD-1285 except the PIN shall be in accordance with 1.2 herein. The marking shall include the PIN, the manufacturer's CAGE code, and the manufacturer's lot date code.

3.7.1 JAN and J marking. The United States Government has adopted and is exercising legitimate control over the certification marks "JAN" and "J", respectively, to indicate that items so marked or identified are manufactured to, and meet all the requirements of specifications. Accordingly, items acquired to, and meeting all of the criteria specified herein and in the applicable specifications shall bear the certification mark "JAN" except that items too small to bear the certification mark "JAN" shall bear the letter "J". The "JAN" or "J" shall be placed immediately before the part number except that if such location would place a hardship on the manufacturer in connection with such marking, the "JAN" or "J" may be located on the first line above or below the part number. Items furnished under contracts or orders which either permit or require deviation from the conditions or requirements specified herein or in the applicable specifications shall not bear "JAN" or "J". In the event an item fails to meet the requirements of this specification and the applicable specification sheets, the manufacturer shall remove completely the military part number and the "JAN" or "J" from the sample tested and also from all items represented by the sample. The "JAN" or "J" certification mark shall not be used on products acquired to contractor drawings or specifications. The United States Government has obtained Certificate of Registration Number 504,860 for the certification mark "JAN" and Registration Number 1,586,261 for the certification mark "J".

3.8 Workmanship. Connectors and accessories shall be processed in such a manner as to be uniform in quality and shall be free from burrs, crazing, cracks, voids, pimples, chips, blisters, pinholes, sharp cutting edges, and other defects that will adversely affect life, serviceability, or appearance (see 4.8.2).

3.9 Inspection for Interchangeability. Receptacles of a given type shall be capable of being mated with associated plugs meeting the requirements of this specification when made by the same manufacturer. Such receptacles and plugs shall meet all the requirements of this specification and associated specification sheets. Plugs and receptacles from different manufacturers may not mate properly.

4. VERIFICATION

4.1 Classification of inspection. The inspection requirements specified herein are classified as follows:

a. First article inspection (see 4.4).

b. Conformance inspection (see 4.5).

4.2 Inspection conditions. Unless otherwise specified, all inspections shall be performed in accordance with the test conditions specified in EIA-364 and the MIL-STD-202 series standards.

4.2.1 Test equipment and inspection facilities. Test and measuring equipment and inspection facilities of sufficient accuracy, quantity and quality to permit performance of the required inspection shall be established and maintained by the contractor. The establishment and maintenance of a calibration system to control the accuracy of the measuring and test equipment (i.e. NCSL Z540.3 or equivalent) shall be required.

4.2.2 Material certification.

4.2.2.1 Hydrolytic stability certification (see 3.3.4.3). A certification that materials used in the construction of the connectors are hydrolytic reversion resistant shall be provided, upon request, to the procuring activity.

4.2.2.2 Fungus resistance certification. A certification that finishes and materials used in the construction of these connectors are fungus inert in accordance with ASTM G21 shall be provided, upon request, to the procuring activity.

4.3 Inspection conditions. Unless otherwise specified herein, all inspections shall be performed in accordance with the test conditions specified in the “GENERAL REQUIREMENTS” of the MIL-STD-202 series standards and EIA-364

4.3.1 Inspection lot. All inspection lots shall consist of all connectors produced under essentially the same conditions and offered for inspection at one time.

4.3.2 Sampling plan. Sampling shall consist of a continuous statistical process control sampling plan with supporting quality conformance documentation in accordance with EIA-557. Where SPC cannot be utilized because of non-continuous production, a lot sampling plan for inspection with C = 0 (accept on zero defects) may be utilized.

4.4 First article inspection. First article inspection shall be performed at a facility acceptable to the Government (see 6.2) on sample units produced with equipment and procedures normally used in production. Use of alternate materials, plating, and processes shall be identified in the product test documentation (see 3.3.1).

4.4.1 Failures. One or more failures shall be cause for refusal to grant first article approval.

4.4.2 Materials inspection. Materials inspection shall consist of verification that the materials shown in table II are used in fabricating the connectors and accessories described in this specification.

TABLE II. Materials.

Component Material	Requirement paragraph	Applicable specifications 1/
Adhesives	3.3.11	N/A
Aluminum	3.3.7.1, 3.3.7.2	SAE-AMS-QQ-A-200 SAE-AMS-QQ-A-200/8 SAE-AMS-QQ-A-225 ASTM B241/B241M
Beryllium copper	3.3.5.1, 3.3.12	ASTM B194 ASTM B768 SAE AS81021
Brass	3.3.5.3	ASTM B36/B36M
Fluorosilicone elastomer	3.3.9	MIL-DTL-25988
Glass filled diallyl phthalate SDG-F or GDI-30F	3.3.6	ASTM D5948
Gold (electroplate)	3.3.5.1.1, 3.3.5.3.1	ASTM B488
Nickel (electroless)	3.3.7.1.2, 3.3.12.1	SAE-AMS-2402
Nickel (electroplate)	3.3.5.1.1, 3.3.5.3.1	SAE-AMS-QQ-N-290
Plastic molded material	3.3.6	MIL-M-24519
Sealants (back seal) 2/	3.3.10	ASTM D5948
Steel (corrosion resistant)	3.3.8.1, 3.3.8.2	SAE-AMS-5640 ASTM A582/A582M
Thermoplastic GST-40F GLCP-30 F	3.3.6	 MIL-M-24519 or ASTM D4067 MIL-M-24519 or ASTM D5138

1/ See applicable paragraph for specific material used.
2/ Not applicable to molded connectors.

4.4.3 Contacts. Individual contacts tuning fork and blade contacts shall be subjected to the tests as specified in table III.

TABLE III. Tuning fork and blade contact prequalification test.

Inspection	Requirement paragraph	Test method	Samples
Visual and mechanical	3.1 and 3.8	4.8.2	20 minimum
Verification of plating thickness	3.3.5.1.1 and 3.3.5.3.1	4.8.3	20 minimum
Solderability	3.4.8	4.8.32	1/ 2/

1/ At the manufacturers discretion solderability may be performed during the prequalification test and not be required to perform the same testing in table IV.
2/ Sampling shall be as specified in the applicable test method.

4.4.4 Samples. Sample units for first article inspection of connector pairs shall be in accordance with 4.4.4.1, sample units for individual module assemblies shall be in accordance with 4.4.4.2, and samples for thermal vacuum outgassing shall be in accordance with 4.4.4.3.

4.4.4.1 Connector pair samples. First article inspection of slash sheet connector pairs. A minimum of 22 fully assembled connector pairs from any two slash sheets shall be subjected to the inspections specified in table IV in the order shown. To pass first article inspection on additional slash sheets, 2 fully assembled connector pairs from each additional slash sheet shall be subjected to the “major group” and subgroup I in table IV, except for class S (space class) connectors.

4.4.4.2 Individual module assembly samples. The tests specified in table IV subgroup VI may utilize individual module assemblies. The minimum sample size for individual modules is two (2).

4.4.4.3 Thermal vacuum outgassing samples. Three (3) samples per slash sheet will be required for thermal vacuum outgassing class S first article inspection.

4.4.5 Inspections.

a. All samples shall be subjected to the inspections of the “major group” in table IV in the sequence indicated.
b. The sample units shall then be divided into six (6) subgroups and shall be subjected to the subgroup testing in table IV. Table IV subgroup testing shall be done in the sequence indicated. When mounting is required, the connector pairs shall be mounted using their normal mounting means.

TABLE IV. Qualification inspection.

Inspection	Requirements	Method
Major group (all samples)		
Visual and mechanical	3.1, 3.3, 3.7, 3.8, and 3.9	4.8.2
Permeability	3.3.4.1	---
Alignment capability	3.4.11.1	---
Withstanding voltage (sea level)	3.4.9.2	4.8.20.1
Withstanding voltage (high altitude)	3.4.9.2	4.8.20.2
Insulation resistance	3.4.9.1	4.8.19
Low signal level contact resistance	3.4.5.1	4.8.18
Contact resistance	3.4.5.1	4.8.14
Contact engagement and separation forces	3.4.3	4.8.4
Ground pin resistance 1/	3.4.5.3	4.8.15
Contact retention 2/	3.4.9.3	4.8.7
EMI shielding effectiveness 3/ (1 pair)	3.4.7	4.8.22
Subgroup I (4 pair)		
Durability	3.4.2	4.8.6
Low signal level contact resistance	3.4.5.1	4.8.18
Shock	3.5.3	4.8.25
Vibration	3.5.2	4.8.24
Connector shell durability	3.4.10.1	---
Low signal level contact resistance	3.4.5.1	4.8.18
Contact retention 2/	3.4.9.3	4.8.7
Withstanding voltage (sea level)	3.4.9.2	4.8.20.1

See notes at end of table.

TABLE IV. Qualification inspection - Continued.

Inspection	Requirement	Method
Subgroup II (4 pair)		
Temperature cycling	3.5.1	4.8.23
Low signal level contact resistance	3.4.5.1	4.8.18
Contact resistance	3.4.5.1	4.8.14
Current overload	3.4.4	4.8.21
Low signal level contact resistance	3.4.5.1	4.8.18
Contact resistance	3.4.5.1	4.8.14
Ground pin resistance 1/	3.4.5.3	4.8.15
Vibration	3.5.2	4.8.24
Low signal level contact resistance	3.4.5.1	4.8.18
Ground pin resistance 1/	3.4.5.3	4.8.15
Contact engagement and separation forces	3.4.3	4.8.4
Low signal level contact resistance	3.4.5.1	4.8.18
Subgroup IIa (2 pair of connectors unmated)		
Humidity	3.5.5	4.8.27
Insulation resistance	3.4.9.1	4.8.19
Withstanding voltage (sea level)	3.4.9.2	4.8.20.1
Subgroup IIb (4 pair of connectors unmated)		
Mating and unmating force	3.6.1	4.8.31
Fluid immersion	3.6.1	4.8.31
Visual examination	3.6.1	4.8.31
Mating and unmating force	3.6.1	4.8.31

See notes at end of table.

TABLE IV. Qualification Inspection - Continued.

Inspection	Requirement	Method
Subgroup III (2 pair)		
Contact retention 2/	3.4.9.3	4.8.7
Durability	3.4.2	4.8.6
Contact engagement and separation forces	3.4.3	4.8.4
Low signal level contact resistance	3.4.5.1	4.8.18
Sand and dust	3.5.8	4.8.30
Low signal level contact resistance	3.4.5.1	4.8.18
Salt spray	3.5.4	4.8.26
Low signal level contact resistance	3.4.5.1	4.8.18
Contact resistance	3.4.5.1	4.8.14
Gas tightness	3.5.7	4.8.29
Low signal level contact resistance	3.4.5.1	4.8.18
Contact resistance	3.4.5.1	4.8.14
Subgroup IV (2 pair)		
Solderability 4/ 6/	3.4.8	4.8.32
Resistance to solder heat	3.6.2	4.8.33
Marking performance (3 connectors) 4/	3.6.4	4.8.34
Subgroup V (2 pair)		
Temperature life	3.5.6	4.8.28
Low signal level contact resistance	3.4.5.1	4.8.18
Visual	3.5.6	4.8.28
Humidity/ temperature cycle	3.5.5	4.8.27.1
Low level contact resistance	3.4.5.1	4.8.18

See notes at end of table

TABLE IV. Qualification Inspection - Continued.

Inspection	Requirement	Method
Subgroup VI (2 pair)		
Contact inductance	3.4.6	---
Module displacement force	3.4.10.3	4.8.5
Compliant pin insulator block retention	3.4.9.4	4.8.8
Compliant pin termination retention 5/	3.4.9.5	4.8.9 or 4.8.11
Compliant pin plated through hole integrity 5/	3.4.9.6	4.8.9 or 4.8.10
Compliant pin termination resistance	3.4.5.2	4.8.17
Shell to shell or shell to ground plane	3.4.10.2	4.8.16
Guide pin and ground pin integrity 6/	3.4.12	4.8.12.1
Guide pin pullout 6/	3.4.11.2	4.8.12.2
Guide bushing push/pullout 6/	3.4.11.3	4.8.12.3
Polarizing key pullout/ pushout 6/	3.4.13.1 and 3.4.13.2	4.8.13.1
Polarizing bushing pushout/pullout 6/	3.4.13.3	4.8.12.3
Polarizing key cantilever load 6/	3.4.13.4	4.8.13.2
Polarizing key torque 6/	3.4.13.5	4.8.13.3
Polarizing bushing rotational stability 6/	3.4.13.6	4.8.13.4
Subgroup VII (3 samples minimum)		
Thermal vacuum outgassing (space applications only) 7/	3.6.3	4.8.35

1/ For connectors with ground pin.
2/ Not applicable to molded male pin connectors.
3/ Backpanel connectors with EMI shield. Contact manufacturer for your requirements.
4/ Samples may be taken from virgin samples or from other subgroups (manufacturers discretion).
5/ Individual contacts shall be tested on a backplane test coupon.
6/ Testing may be done with individual connector modules.
7/ Space class connectors only.

4.5 Conformance inspection. Conformance inspection shall be performed on sample units produced with equipment and procedures normally used in production. Manufacturers shall keep lot records for 5 years (minimum), monitor for compliance to the prescribed procedure, and observe that satisfactory manufacturing conditions and records on lots are maintained for those connectors. The records shall be available for review by customers at all times. The initial qualification samples are to be maintained as long as the design is approved.

4.5.1 Inspection of product for delivery. Inspection of product for delivery shall consist of groups A and B inspections.

4.5.2 Inspection lot. An inspection lot shall consist of all the connectors of the same PIN produced under essentially the same conditions, and offered for inspection at one time.

4.5.3 In-house statistical control. If in-house statistical control is implemented coordinate with the Government activity

4.5.4 Group A inspection. Group A inspection shall consist of the inspections specified in table V, and shall be performed on a lot by lot basis.

TABLE V. Group A inspection.

Inspection	Requirement	Method	Comments
Visual and mechanical examination	3.1, 3.3, 3.7, 3.8, and 3.9	4.8.2	3x Magnification
Verification of plating thickness	3.3.5.1.1 and 3.3.5.3.1	4.8.3	Individual contacts (see 4.4.2) 2/
Insulation resistance 1/	3.4.9.1	4.8.19	
Withstanding voltage (sea level) 1/	3.4.9.2	4.8.20.1	

1/ Samples can be included in shipment but shall be identified as test samples.
2/ At the discretion of the Government activity the manufacturer may verify conformance to 3.3.5.1.1 or 3.3.5.3.1 as applicable with a certificate of compliance stating testing has been completed in accordance with 4.8.3 as applicable.

4.5.4.1 Group A inspection sampling plan. Statistical sampling and inspection for connectors submitted for group A inspection shall be on a lot by lot basis with sample sizes listed in table V. Any occurrence of failure shall be considered as failure of the lot.

TABLE VI. Lot and sample size.

Lot size	Sample size
1 to 2	all
3 to 50	5
51 to 90	7
91 to 150	11
151 to 280	13
281 to 500	16
501 to 1200	19
1201 to 3200	23
3201 to 10000	29
10001 and over	35

4.5.4.2 Rejected lots. Rejected lots may be reworked to correct the rejected characteristic by the manufacturer, and resubmitted for acceptance. Resubmitted lots shall be inspected using the next higher sample size of table VI. The resubmitted lot shall be identified along with the cause of the discrepancy and the corrective action incorporated.

4.6. Group B inspection. DELETED.

4.7 Group C inspection (periodic). DELETED.

4.8 Methods of inspection.

4.8.1 Test methods. The following tests and test methods assure connector integrity within typical operating conditions and applications. Alternate test methods are allowed with prior approval by the Government activity. The test methods described herein are the preferred methods and take precedence when alternate test methods give differing or conflicting results.

4.8.2 Visual and mechanical inspection. Contacts and connectors shall be examined to ensure conformance with this specification and associated specification sheets. Where feasible, in-process controls may be used in lieu of specific inspections required by this paragraph provided such controls assure conformance to all requirements. Continuous examination shall be performed to assure compliance with the following requirements:

a. Specification sheets (see 3.1).
b. Materials (see 3.3, 3.3.4, and 4.4.2).
c. Marking (see 3.7).
d. Workmanship (see 3.8).
e. Inspection for interchangeability (see 3.9)

4.8.3 Verification of contact plating thickness (see 3.3.5.1.1 or 3.3.5.3 as applicable). Verification of under plating and finish plating shall be measured in accordance with ASTM B499, ASTM B567, or ASTM B568. A cross-sectioning method, in accordance with ASTM B487 or ASTM B748, can also be used as a referee method to confirm the precision when thicknesses of 30 microinches (0.76 µm) or above are used. Reference SAE-AS39029 and figure 1 for areas of localized finish on contact mating surfaces. The manufacturer at their option may supply individual blade or tuning fork contacts.

4.8.3.1 Verification of contact plating thickness blade contacts. A minimum of 2 measurements per contact shall be made on the contact mating surface. One measurement shall be on the top and bottom of the blade contact. Readings shall not be averaged.

4.8.3.2 Verification of contact plating thickness tuning fork contacts. Tuning fork contacts, if required, can be carefully disassembled so the spring member gold thickness can be measured. The following conditions shall apply:

a. Visually inspect the contact for absence of plating. Any absence of plating is not acceptable.
b. When applicable, a minimum of 2 points shall be measured per contact on the contact mating surface. Readings shall not be averaged.

4.8.3.3. Termination ends (printed wiring board terminations). One termination end per contact shall be measured. A minimum of 2 points on the termination surface, not the end of the pins, shall be measured for each contact. Termination end may be rotated, but measurement points shall be progressively further up or down from the last point. Readings shall not be averaged.

4.8.4 Contact engagement and separation forces (see 3.4.3). The contact engagement and separation forces test shall be performed in the sequence as specified in test procedure EIA 364-37, method A. The following details shall apply:

a. Tuning fork contacts (a minimum of 13) shall be mounted in a suitable position or fixture for applying gradually increasing loads for the engagement and separation of the test pin (defined in the individual requirements drawing) from the fixtured tuning fork contacts.
b. Insertion of the test pins shall be to a depth of .140 ± .020 inch (3.56 ± 0.51 mm) when measured from the front of the tuning fork.
c. The test pin shall not bottom in the tuning fork contact.

4.8.5 Module displacement force (see 3.4.10.3). The module displacement force requirements specified in 3.4.10.3 shall be met when tested in accordance with the following procedure:

a. With the module connector properly mounted and terminated to module boards in the module frame and the module connector fully mated with a solidly fixtured backplane connector with all appropriate guide pins and keying hardware installed.
b. A force as specified in 3.4.10.3 is applied perpendicular to the module frame guide ribs and parallel to the connector interface plane. This force shall be sufficient to result in a lateral displacement (to simulate module cold wall clamping) of the module connector frame.
c. This test shall be performed in both directions.
d. Lateral displacement shall be no grater than .007 inch (0.18 mm) for single-sided mounting ears (non-float mount).
e. Lateral displacement shall be no grater than 1.00 inch (2.54 mm) for double-sided mounting ears (float mount).
f. There shall be no damage to the connector and nor degradation in connector performance after this test.

4.8.6 Durability (see 3.4.2). The requirements specified in 3.4.2 shall be met when tested in a mate-unmate cycle fixture, which simulates normal printed circuit card utilization of the connector while maintaining proper alignment of the two connector housings. The test equipment and test sample requirements of test procedure EIA 364-09 are to be followed. Any special test requirements (lateral displacement, etc.) are to be detailed in the individual specification sheets. Following the durability test, the connectors shall pass the tests and examinations as specified on table III, subgroup III.

4.8.7 Contact retention (see 3.4.9.3). Connectors shall meet the requirements of 3.4.9.3 and be tested in accordance with test procedure EIA 364-26. The following details shall apply:

a. Number of samples: Unless otherwise specified, 25 pins per connector shall be tested.
b Contact test positions shall be evenly distributed in each row of multi-row connectors, at each end, and in the middle portions.
c. Compliant pins shall be properly installed in a backplane test coupon.
d. Applied axial load: One pound (0.45 kg) per second until the load specified in 3.4.9.3 or as specified in the individual specification sheet, has been reached. Maintain load for 5 seconds.
e. Maximum allowable contact displacement: .003 inch (0.07 mm), during application of specified force and after removal of specified force.
f. Axial direction: Straight, both directions.

4.8.8 Compliant pin insulator block retention (see 3.4.9.4). The compliant pin insulator contact retention shall meet the requirements specified in 3.4.9.4. The following details shall apply:

a. The test setup will be similar as specified on figure 4.
b. The contact housing retention shall be tested with 20 contacts evenly distributed and installed in the connector module block.
c. Compliant pins shall be properly installed in a backplane test coupon, as specified herein, for this test.

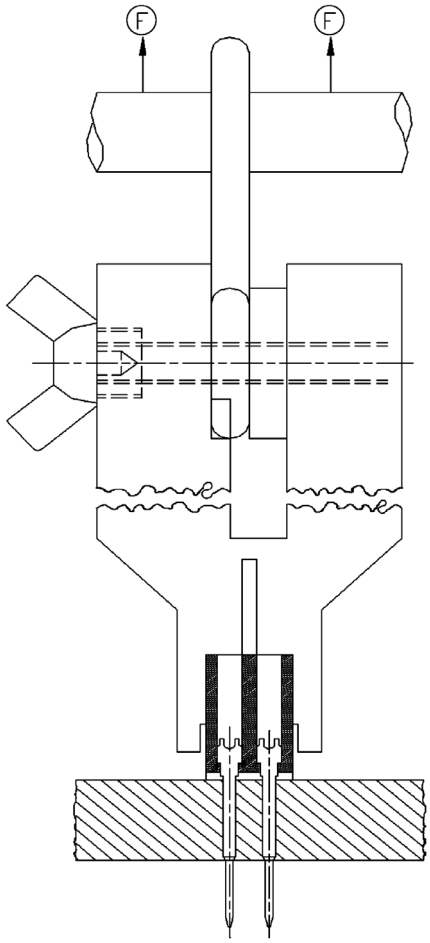

FIGURE 4. Test set-up for compliant pin insulator block retention.

4.8.9 Compliant retention and plated through hole integrity (see 3.4.9.5 and 3.4.9.6). When performing tests as specified in 4.8.10 and 4.8.11, the testing may be combined. When combined, force monitoring shall be as specified in steps a through e. Unless otherwise specified, the sample size shall be as specified in steps a through e.

Step a) 60 pins: Insert first pin (forces unmonitored).
Step b) 60 pins: Retention force (record push out force).
Step c) 10 pins: Insert and remove 2nd pin (forces unmonitored).
Step d) 10 pins: Insert 3rd pin (forces unmonitored).
Step e) 10 pins: Perform plated through hole integrity.

4.8.10 Compliant pin termination retention (see 3.4.9.5). The compliant pin contact termination retention requirements specified in 3.4.9.5 shall be measured and tested in accordance with test procedure EIA 364-29. The following details shall apply:

a. Unless otherwise specified, 60 individual pins shall be tested.
b. Compliant pins shall be properly installed in a backplane test coupon.

4.8.11 Compliant pin plated through hole integrity (see 3.4.9.6). The compliant pin plated through hole integrity shall meet the requirements specified in 3.4.9.6 when tested as specified in test procedure EIA 364-96. The following details shall apply:

a. After hole conditioning as specified in 4.8.9, compliant contacts contained in plated-through holes shall be microsectioned as specified herein to determine conformance to 3.4.9.6. Suggested method of microsection appears on figure 5. The number of contacts sectioned at one time is at tester's discretion; the total number of contacts to be sectioned shall be 10.
b. Samples shall be viewed at magnification of 400X to resolve questionable copper thickness interfaces between the contact and printed-wiring laminate.
c. Double sided printed wiring board or backplane test coupon.

    (1) 10 plated-through holes containing compliant components shall be microsectioned, 5 in the horizontal and 5 in the vertical plane, and examined for conformance to 3.4.9.6.
    (2) At least two different levels of hole depth shall be viewed and measurements shall be taken at the entrance to the hole and half-way down the compliant section.
    (3) It is not mandatory that the same hole be viewed at both levels.

d. Multilayer printed-wiring board or backplane test coupon.

    (1) 10 plated-through holes containing compliant contacts shall be microsectioned, 5 in the vertical and 5 in the horizontal planes.
    (2) In both the horizontal and vertical planes, the microsectioned sample shall be examined for conformance to 3.4.9.6.
    (3) On the vertical plane, the sample shall additionally be viewed to ensure that no copper cracks, separations between conductive interfaces, or laminate-to-copper separations have occurred.

e. The 2nd and 3rd virgin pins shall be inserted in the same hole as the 1st pin and in the same orientation.

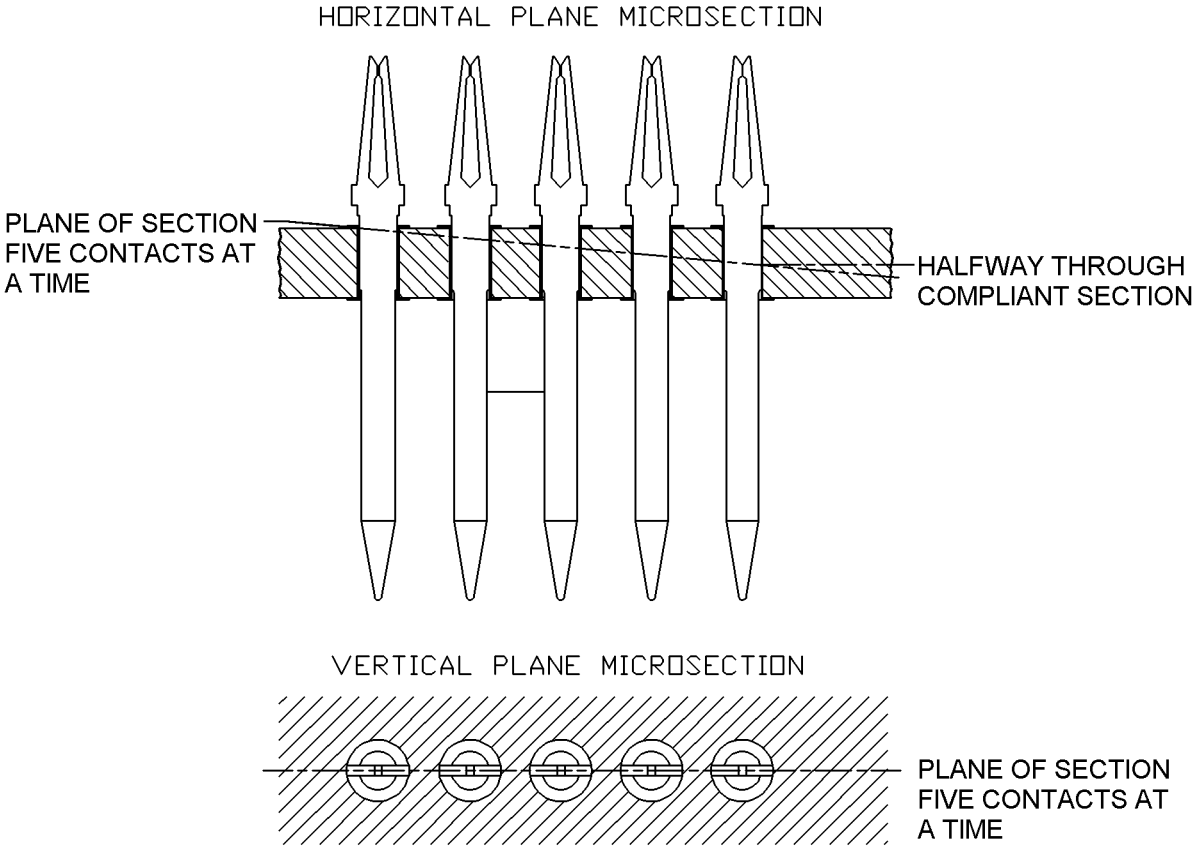

FIGURE 5. Horizontal and vertical plane microsection.

4.8.12 Guide pin, ground pin and guide bushing tests.

4.8.12.1 Guide pin and ground pin integrity (see 3.4.12). The guide pin or ground pin shall be capable of withstanding the cantilever load as specified in 3.4.12. The following details shall apply:

a. With the connector insulator supported to prevent movement of the unit, the force specified in 3.4.12 shall be gradually applied at the end of the guide pin perpendicular to the longitudinal axis of the pin.
b. The force shall be applied in a gradual rate (2 to 5 seconds) and maintained for 10 to 12 seconds.

4.8.12.2 Guide pin pullout (see 3.4.11.2). The guide pin pullout requirements specified in 3.4.11.2 shall be tested. When applying a load of 10 lbf (44.5 N) for 10 seconds to the surface of the keying peg, opposite to that in which it was inserted into the housing, the keying peg shall not move from its original installed position.

4.8.12.3 Polarizing bushing pushout/pullout (see 3.4.11.3). The guide bushing pushout/pullout force specified in 3.4.11.3 shall be measured. The following details shall apply:

a. With a guide bushing properly installed in its housing, apply a pushout/pullout force along the central longitudinal axis of the bushing until the value specified in 3.4.11.3 has been reached.
b. The force shall be applied in a gradual rate (2 to 5 seconds) and shall be held for 10 to 12 seconds.
c. No movement of the bushing within the housing is allowed.
d. Both directions (if appropriate) shall be tested.
e. Special fixtures to perform this test are allowed providing the fixtures do not affect the structural integrity of the bushing or the housing.
f. Adhesive on the bushing is allowed.

4.8.13 Polarizing key integrity tests.

4.8.13.1 Polarizing key pullout/pushout (see 3.4.13.1 and 3.4.13.2). Polarization keys shall withstand the force specified in 3.4.13.1. The following details shall apply:

a. With the connector insulator supported to prevent movement of the unit, the forces specified in 3.4.13.1 and 3.4.13.2 shall be applied to the key in the longitudinal axis of the key.
b. The force shall be applied in a gradual rate (2 to 5 seconds) and maintained for 10 to 12 seconds.
c. Both directions shall be tested.

4.8.13.2 Polarization key cantilever load (see 3.4.13.4). Polarization key cantilever shall withstand the force specified in 3.4.13.4. The following details shall apply:

a. With the connector insulator supported to prevent movement of the unit, the force specified in 3.4.13.4 shall be gradually applied at the end of the key perpendicular to the longitudinal axis of the pin.
b. The force shall be applied gradually (2 to 5 seconds) and maintained for 10 to 12 seconds.

4.8.13.3 Polarizing key torque (see 3.4.13.5). Polarizing key shall withstand the torque specified in 3.4.13.5. The following details shall apply:

a. The connector insulator shall be supported to prevent rotation of the unit.
b. The torque specified in 3.4.13.5 shall be applied in a plane perpendicular to the longitudinal axis of the key. The longitudinal axis is considered the center of the key diameter extending the length of the key.

4.8.13.4 Polarizing bushing rotational stability (see 3.4.13.6). Polarizing bushing shall withstand the rotational stability torque specified in 3.4.13.6. The following details shall apply:

a. The torque specified in 3.4.13.6 shall be measured by installing a mating polarizing pin, or similarly designed test tool, to be used as a torque transmitting tool, into a polarizing bushing which has been properly installed in the connector housing.
b. A torque, to the limits specified in 3.4.13.6 shall be applied to the bushing along its central axis through the mated polarizing pin.
c. The torque shall be gradually applied (1 to 2 seconds) and held for 10 seconds.
d. No rotational movement of the bushing within the housing is allowed.
e. Both directions shall be tested.

4.8.14 Contact resistance (see 3.4.5.1). Contact resistance requirements specified in 3.4.5.1 shall be met when tested in accordance with test procedure EIA 364-06. The following details shall apply:

a. Unless otherwise specified, 50 positions per connector shall be tested. Contact test positions shall be evenly distributed in each row of multi-row connectors, at each end, and in the middle portions.
b Test current: 1 ampere (signal contacts).
c. Power contact: Test current 10 ampere.
d. After environmental conditioning (see table IV, subgroup III) the low level contact resistance shall not exceed 20 milliohms (see 4.8.18).

4.8.15 Ground pin resistance (see 3.4.5.3). Ground pin resistance shall meet the requirements specified in 3.4.5.3. Test current shall be 3 amperes.

4.8.16 Shell to shell or shell to ground plane continuity (see 3.4.10.2). Shell to shell or shell to ground plane continuity shall meet the requirements specified in 3.4.10.2. The following details shall apply:

a. Fully mated pairs of connectors. Unless otherwise specified, 50 positions per connector shall be tested. Contact test positions shall be evenly distributed in each row of multi-row connectors, at each end, and in the middle portions.
b. All ground pins clips, or other shell to shell grounding devices installed shall be subject to a continuity test, measuring from the rear most extremity of each shell.

4.8.17 Compliant pin termination resistance (see 3.4.5.2). The compliant pin contact termination resistance requirements shall meet the requirements specified in 3.4.5.2. The test shall be performed in accordance with test procedure EIA 364-23. The following details apply:

a. Test current: 100 milliamp maximum with a 20 mv open circuit.
b. Method of connection shall be as specified on figure 6.
c. The test shall be performed with contacts properly terminated in a test coupon or as specified herein.
d. Points of measurement using a double sided printed wiring board shall be from the annular ring of the plated through hole to the pin.

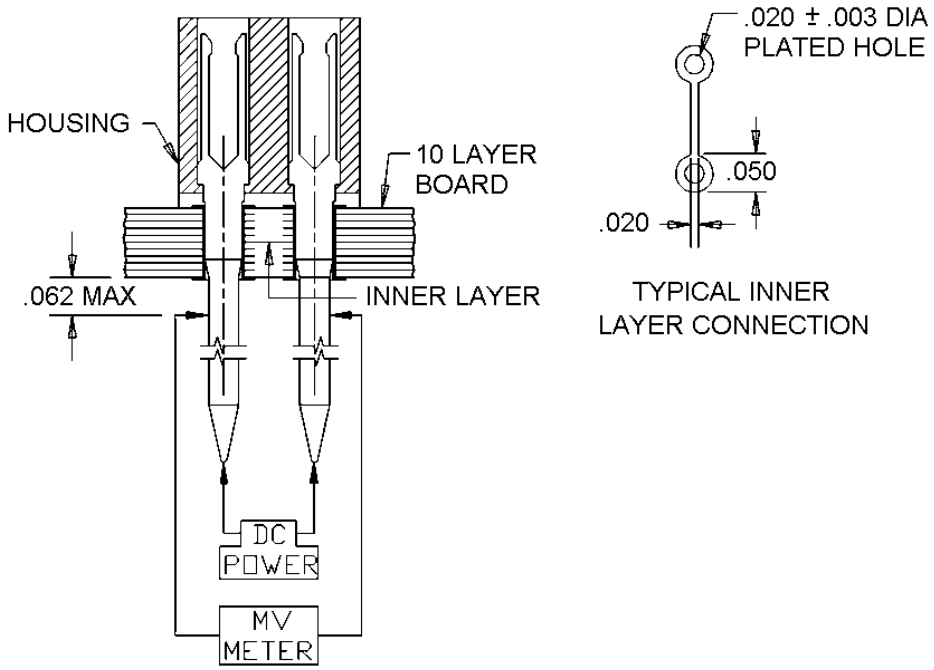

Inches	mm
.003	0.0
.020	0.508
.050	1.016
.062	1.575

NOTES:
1. Dimensions are in inches.
2. Metric equivalents are given for information only.
3. Unless otherwise specified, tolerances for 3 place decimals is ±.005 inch (0.13 mm).

FIGURE 6. Contact to inner layer-resistance.

4.8.18 Low signal level contact resistance (see 3.4.5.1). The requirements specified in 3.4.5.1 shall be met when tested in accordance with test procedure EIA 364-23. The following details shall apply:

a. Test samples shall consist of mated pairs of connectors. Unless otherwise specified, 50 positions per connector shall be tested. Contact test positions shall be evenly distributed in each row of multi-row connectors, at each end, and in the middle portions.
b. Test current of 10 milliamperes maximum.

4.8.19 Insulation resistance (see 3.4.9.1). Mated connectors shall be tested in accordance with test procedure EIA 364-21. The following exceptions apply:

a. Unless otherwise specified, 20% of the contact population shall be tested. Contact test positions shall be evenly distributed in each row of multi-row connectors, at each end, and in the middle portions.
b. Test voltage: 100 V dc ± 5%.
c. The connectors shall meet the insulation resistance requirements of 3.4.9.1.

4.8.20 Withstanding voltage (see 3.4.9.2).

4.8.20.1 Withstanding voltage (sea level) (see 3.4.9.2). The requirements specified in 3.4.9.2 shall be met with mated connectors when tested in accordance with test procedure EIA 364-20, method A, test condition I. The following details shall apply:

a. Unless otherwise specified, 20% of the contact population shall be tested. Contact test positions shall be evenly distributed in each row of multi-row connectors, at each end, in the middle portions, and contact to shell.
b. Test voltage: 600 volts rms, 60 Hz.

4.8.20.2 Withstanding voltage (altitude) (see 3.4.9.2). The requirements specified in 3.4.9.2 shall be met with mated connectors when tested in accordance with test procedure EIA 364-20, method A, test condition IV. The following details shall apply:

a. Unless otherwise specified, 20% of the contact population shall be tested.
b. Contact test positions shall be evenly distributed in each row of multi-row connectors, at each end, and in the middle of each row, and contact to shell.
c. Test voltage: 250 volts rms, 60 Hz.

4.8.21 Current overload (see 3.4.4). Current overload shall be met when tested as specified in 3.4.4. The following details shall apply:

a. Signal contacts: Ten random, nonadjacent contacts shall be subjected to 2X full rated current (3 amps) for 5 minutes and full rated current (1.5 amps) for 55 minutes, on a continuous basis for 24 hours.
b. Power contacts: Contacts shall be subjected to 2X full rated current (20 amps) for 5 minutes and full rated current (10 amps) for 55 minutes, on a continuous basis for 24 hours.

4.8.22 EMI shielding (from 100 to 10,000 MHz) (see 3.4.7). The EMI shielding effectiveness shall meet the requirements of 3.4.7. Mated connectors shall be measured using the mode-stirred technique specified in test procedure EIA 364-66.

4.8.23 Temperature cycling (3.5.1). Connectors shall meet the requirements of 3.5.1 when tested in accordance with test procedure EIA 364-32, condition I, 5 cycles. The following details shall apply:

a. A mated connector shall be weighed and the weight recorded.
b. The dwell time shall be in accordance with test procedure EIA 364-32.
c. Low temperature: -65°C, +0°, -5°C.
d. High temperature: +125°C, +3°C, -5°C.

4.8.24 Vibration (3.5.2). Unless otherwise specified, the requirements specified in 3.5.2 shall be met when tested in accordance with test procedure EIA 364-28, test condition V, test condition letter E, or as specified in the specification sheets. The following details shall apply:

a. Test current: 100 milliampere.
b. Unless otherwise specified, the duration shall be 45 minutes/axis.
c. Following completion of testing on each axis, solder joints, contact leads, and plastic materials shall be examined at 10 x magnification for signs of cracking or other degradation. Mounting hardware shall be visually examined for loosening, fracture, or other deterioration.
d. The remainder of the connector shall be inspected for damage and evidence of unusual wear.
e. A suitable monitoring circuit shall be provided to detect any interruption greater than 10 nanoseconds. Two contacts per detector channel shall be used (reference test procedure EIA 364-87).
f. Mounting.

(1) Mounting. For right angle connectors, the receptacle shall be mounted on an epoxy glass printed wiring board, .063 inch (1.59 mm) minimum (plus added tolerances) thickness and clamped to a suitable fixture which in turn shall be firmly mounted on the vibration table.
(2) Each plug shall be mounted in the normal manner at one end of a rectangular epoxy glass laminate board.
(3). The board shall be .063 inch (1.59 mm) minimum thickness and the width shall be equal to the length of the plug plus .125 inch (3.17 mm) maximum.
(4) Optional mounting means may be utilized where the intended application dictates unique configurations and may be utilized upon agreement between the user, manufacturer, and government.
(5). A stabilizing arrangement shall be provided as specified on figure 7, such that a resisting force shall exist through a compliant material (rubber with a shore A durometer of about 25), which will prevent the mated connectors from separating during vibration and shock.
(6) The resisting medium shall contact the top and side surfaces on the test jig only and no initial load shall be imparted to the connector other than the weight of the test jig.
(7) For straight through connectors, a mated pair shall be mounted on individual parallel wiring boards and secured by bolts and standoffs as specified on figure 8 so that the distance between the wiring boards is equal to the height of the assembled connectors.
(8) A minimum of 12 signal contacts wired in series shall be monitored for discontinuity. The wired contact locations on the connector shall be 4 on each end and 4 randomly placed in the middle. Other contacts, power, ground, etc., shall be 100 percent monitored.

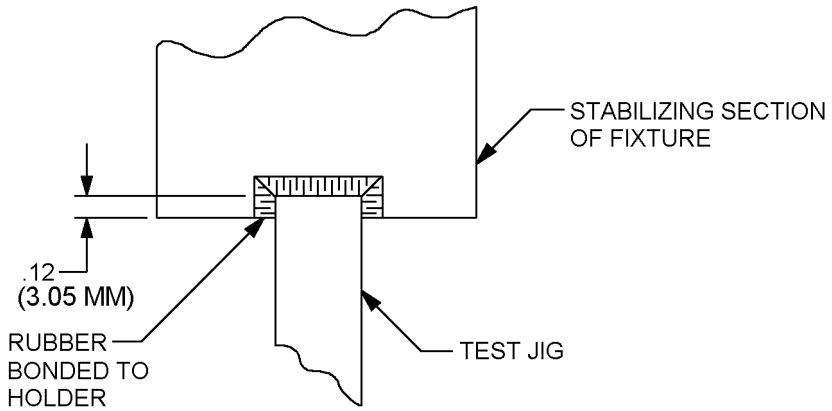

NOTES:
1. Dimensions are in inches.
2. Metric equivalents are given for information only.

FIGURE 7. Stabilizing arrangement.

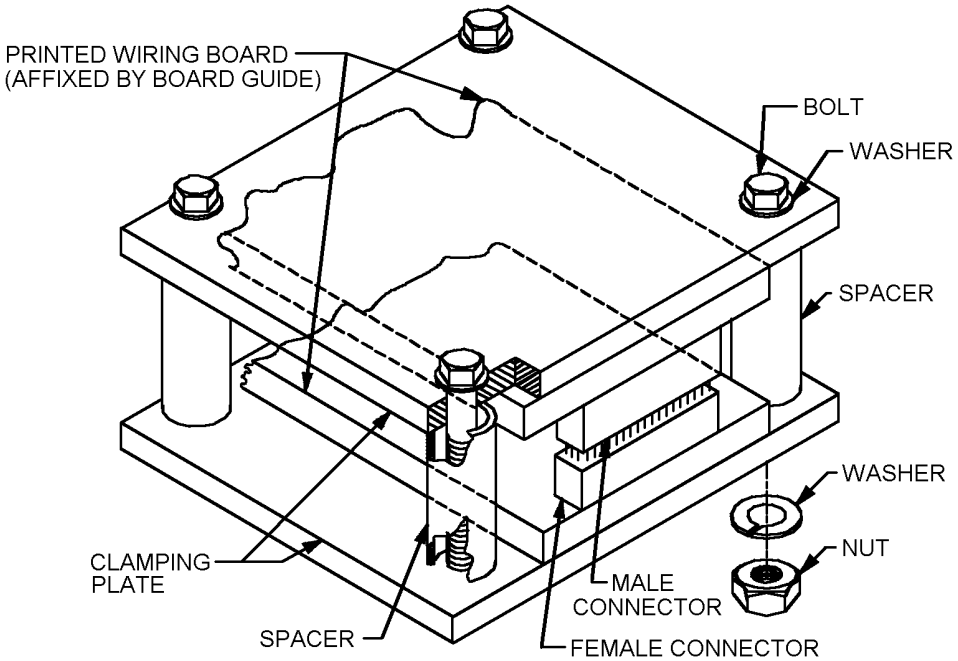

FIXTURE MAY BE A MULTIPLE TYPE

FIGURE 8. Mounting fixture.

4.8.25 Shock (see 3.5.3). Mated connectors shall meet the requirements specified in 3.5.3 when tested in accordance with test procedure EIA 364-27, condition G. The following details shall apply:

a. Mounting method and accessories: In accordance with 4.8.24.
b. A suitable monitoring circuit shall be provided to detect any interruption greater than 10 nanoseconds. Two contacts per detector channel shall be used (reference test procedure EIA 364-87). Other contacts used for power, ground, etc, shall be 100 percent monitored.
c. Optional mounting means may be utilized where the intended application dictates unique configurations, upon agreement between the user, manufacturer, and government.
d. Test current: 100 milliampere.
e. Connector performance shall be monitored as required by 3.5.3 following completion of shock along each axis.
f. Solder joints and contact leads shall be examined at 10 x magnification for signs of cracks or other degradation.
g. The remainder of the connectors shall be inspected for damage and evidence of unusual wear.

4.8.26 Salt spray (see 3.5.4). The requirements specified in 3.5.4 shall be met when connectors are tested in accordance with test procedure EIA 364-26, condition B.

4.8.27 Humidity (see 3.5.5). The requirements specified for insulation resistance (3.4.9.1) and humidity (see 3.5.5) shall be met when unmated connectors are tested in accordance with test procedure EIA 364-31, test condition A, method II. The following details shall apply:

a. Test voltage shall be 30 Vdc.
b. Test current: 1 ampere.
c. Unless otherwise specified, 50 positions per connector shall be tested. Contact test positions shall be evenly distributed in each row of multi-row connectors, at each end, and in the middle portions.
d. Subcycle in accordance with test procedure EIA 364-31 step 7a only.
e. Maximum temperature extreme shall be 125°C.
f. Insulation resistance shall be tested in accordance with 3.4.9.1 after completion of the final cycle and removal of surface moisture from the connector.

4.8.27.1 Humidity/temperature cycling (see 3.5.5). When unmated/mated connectors are tested in accordance with test procedure EIA 364-31, test condition A, method IV the insulation resistance (see 3.4.9.1) and humidity (see 3.5.5) requirements shall be met. The following details shall apply:

a. Test voltage shall be 30 Vdc.
b. Test current: 1 ampere.
c. Unless otherwise specified, 50 positions per connector shall be tested. Adjacent contact test positions shall be evenly distributed in each row of multi-row connectors, at each end, and in the middle portions. One measurement shall be taken between the shell and the closest contact.
d. Subcycle step 7a only.
e. Maximum temperature extreme shall be 125°C.
f. Insulation resistance shall be tested in accordance with 3.4.9.1 after completion of the final cycle and removal of surface moisture from the connector.

4.8.28 Temperature life (see 3.5.6). The requirements specified in 3.5.6 shall be met when tested in accordance with test procedure EIA 364-17, test condition 3, test time condition D.

4.8.29 Gas tightness (see 3.5.7). The requirements specified in 3.5.7 shall be met when tested in accordance with test procedure EIA 364-36. The following details shall apply:

After exposure, low level contact resistance test shall be performed (see 3.4.5.1).

(1) No relative movement of the mated contacts shall be allowed.
(2) The low signal level contact resistance shall not increase by more than 20 milliohms from initial readings (see 3.4.5.1).

4.8.30 Sand and dust (see 3.5.8). The requirements specified in 3.5.8 shall be met when tested in accordance with MIL-STD-202, method 110.

4.8.31 Fluid immersion (see 3.6.1). The requirements of 3.6.1 shall be met when tested in accordance with test procedure EIA 364-10. The following details shall apply:

a. Fluids to be used see table VIII.

TABLE VIII. Test fluids.

Test condition	Fluid
A	Hydraulic oil in accordance with MIL-PRF-5606
B	Turbine fuel, aviation, grade JP-5 in accordance with MIL-DTL-5624
D	Lubricating oil in accordance with MIL-PRF-23699
I	Isopropyl alcohol in accordance with ASTM D770
N/A 1/	Synthetic oil in accordance with MIL-PRF-87257

1/ Test fluid not specified in test procedure EIA 364-10.

b. Before the fluid immersion, precondition the contacts by mating and unmating the connectors 5 times.
c. After preconditioning the contacts measure and document the initial mating and unmating forces as specified in test procedure EIA-364-13.
d. After the fluid immersion, visually inspect the connectors in accordance with 3.6.1.
e. Then measure the connector mating and unmating forces. Deviation of the forces shall not be more than 5 percent of the initial value measured when tested as specified in test procedure EIA-364-13.

4.8.32 Solderability (see 3.4.8). The requirements specified in 3.4.8 shall be met when tested in accordance with MIL-STD-202, method 208. The following details shall apply:

a. For quality certification inspection table IV and group B testing table VII, the test samples may be connector piece parts that are not yet assembled. Individual contacts, helical coil, and any part of the connector assembly that has a potential for being soldered shall be tested.
b. Unless otherwise specified twenty percent, but not less than 9 termination tails or leads shall be tested.

4.8.33 Resistance to solder heat (see 3.6.2). The connectors shall meet the requirement specified in 3.6.2 when tested in accordance with MIL-STD-202, method 210, test condition B except the immersion duration shall be 5 +1/-0 seconds. Prior to testing, the solder terminations shall be immersed in RMA flux in accordance with J-STD-004.

4.8.34 Marking performance (see 3.6.4). The marking shall meet the requirements specified in 3.6.4, when tested in accordance with MIL-STD-202, method 215.

4.8.35 Thermal vacuum outgassing (space classes only) (see 3.6.3). The requirements specified in 3.6.3 shall be met. All nonmetallic materials, including lubricants, used in the manufacture of these connectors shall be tested in accordance with ASTM E595 to determine the maximum TML of the original specimen mass and the VCM content of the original specimen mass. For the purpose of determining TML and VCM of connectors, the original specimen mass shall be the assembled connector excluding metallic parts. The TMC and VCM for the connectors may be determined by testing the specific materials of the connector and calculating the loss.

5. PACKAGING

5.1 Packaging. For acquisition purposes, the packaging requirements shall be as specified in the contract or order (see 6.2). When actual packaging of materiel is to be performed by DoD or in-house contractor personnel, these personnel need to contact the responsible packaging activity to ascertain packaging requirements. Packaging requirements are maintained by the Inventory Controls Point packaging activities within the Military Service or Defense Agency, or within the Military Service system commands. Packaging data retrieval is available from the managing Military Department's or Defense Agency's automated packaging files, CD-ROM products, or by contacting the responsible packaging activity.

6. NOTES

(This section contains information of a general or explanatory nature that may be helpful, but is not mandatory.)

6.1 Intended use.. These connectors are intended for use on printed wiring boards and backpanels on miniaturized equipment sub-assemblies with low power requirements. The connectors covered by this specification are militarily unique because they are required to operate satisfactorily under sinusoidal vibration (up to 17 g's tested over 50 to 2000 Hz); withstand 48 hours of salt spray; withstand 100 g's of shock with no electrical discontinuity; and operate at temperatures of minus 55 to plus 125 degrees Celsius. Commercial electronic components are not designed to withstand these extreme conditions or sudden environmental changes, and would experience catastrophic failure.

6.2 Acquisition requirements. Acquisition documents should specify the following:

a. Title, number, and date of this specification.
b. Title, number, and date of the applicable specification sheet and the complete PIN (see 3.1).
c. Material certification (see 4.2.2).
d. If thermal vacuum outgassing (space class only) testing is required.
e. If test reports are required.

6.3 Qualification. With respect to products requiring qualification, awards will be made only for products that, at the time of award of contract, qualified for inclusion in Qualified Products List QPL No. 32234 whether or not such products have actually been so listed by that date. The attention of the contractors is called to these requirements, and manufacturers are urged to arrange to have the products that they propose to offer to the Federal Government tested for qualification in order that they may be eligible to be awarded contracts or orders for the products covered by this specification. Information pertaining to qualification or products may be obtained from Defense Supply Center Columbus, P.O. Box 3990, ATTN: DSCC-VQ, Columbus, Ohio 43218-3990 or emailed to vqp.chief@dla.mil.

6.3.1 Provisions governing qualification (SD-6). Application procedures should be in accordance with the "Provisions Governing Qualification" (SD-6). Copies of "Provisions Governing Qualification" are available online at https://assist.dla.mil or from the Standardization Document Order Desk, 700 Robbins Avenue, Building 4D, Philadelphia, PA 19111-5094.

6.4 Tin whisker growth. The use of alloys with tin content greater than 97 percent, by mass, may exhibit tin whisker growth problems after manufacture. Tin whiskers may occur anytime from a day to years after manufacture and can develop under typical operating conditions, on products that use such materials. Conformal coatings applied over top of a whisker-prone surface will not prevent the formation of tin whiskers. Alloys of 3 percent lead, by mass, have shown to inhibit the growth of tin whiskers. For additional information on this matter, refer to ASTM-B545 (Standard Specification for Electrodeposited Coatings of Tin).

6.5 Vacuum outgassing epoxy. The recommended epoxy to use to pass the vacuum outgasing testing specified in 4.8.35 is Loctite Hysol ™ EA9394.

6.6 Environmentally preferable materials. Environmentally preferable materials should be used to the maximum extent possible to meet the requirements of this specification. Table IX lists the Environmental Protection Agency (EPA) top seventeen hazardous materials targeted for major usage reduction. Use of these materials should be minimized or eliminated unless needed to meet the requirements specified herein (see section 3).

TABLE IX. EPA top seventeen hazardous materials.

Benzene	Dichloromethane	Tetrachloroethylene
Cadmium and compounds	Lead and compounds	Toluene
Carbon Tetrachloride	Mercury and compounds	1,1,1 - Trichloroethane
Chloroform	Methyl Ethyl Ketone	Trichloroethylene
Chromium and compounds	Methyl Isobutyl Ketone	Xylenes
Cyanide and compounds	Nickel and compounds	

6.7 Subject term (key word) listing.

Beryllium copper
Gold
Hydraulic oil
Inserts
Isopropyl alcohol
Lead
Lubricating oil
Nickel
Perchloroethylene
Plug
Polarization
Receptacle
Tuning
Turbine fuel
Zinc

CONCLUDING MATERIAL

Custodians:
Army - CR
Navy - EC
Air Force - 11
DLA - CC

Preparing activity:
DLA - CC

(Project 5935-2024-132)

NOTE: The activities listed above were interested in this document as of the date of this document. Since organizations and responsibilities can change, you should verify the currency of the information above using the ASSIST Online database at https://assist.dla.mil.