INCH-POUND

MIL-DTL-28840/3F
w/AMENDMENT 2
03 March 2021
SUPERSEDING
MIL-DTL-28840/3F
w/AMENDMENT 1
29 March 2019

DETAIL SPECIFICATION SHEET

CONNECTOR ACCESSORIES, ELECTRICAL, CIRCULAR, THREADED, HIGH SHOCK, HIGH DENSITY, SHIPBOARD, CLAMPS, STRAIN RELIEF, 45 DEGREE, OPEN, FOR ELECTRICAL CONNECTORS

This specification is approved for use by all Departments and Agencies of the Department of Defense.

The requirements for acquiring the product described herein shall consist of this specification sheet and MIL-DTL-28840.

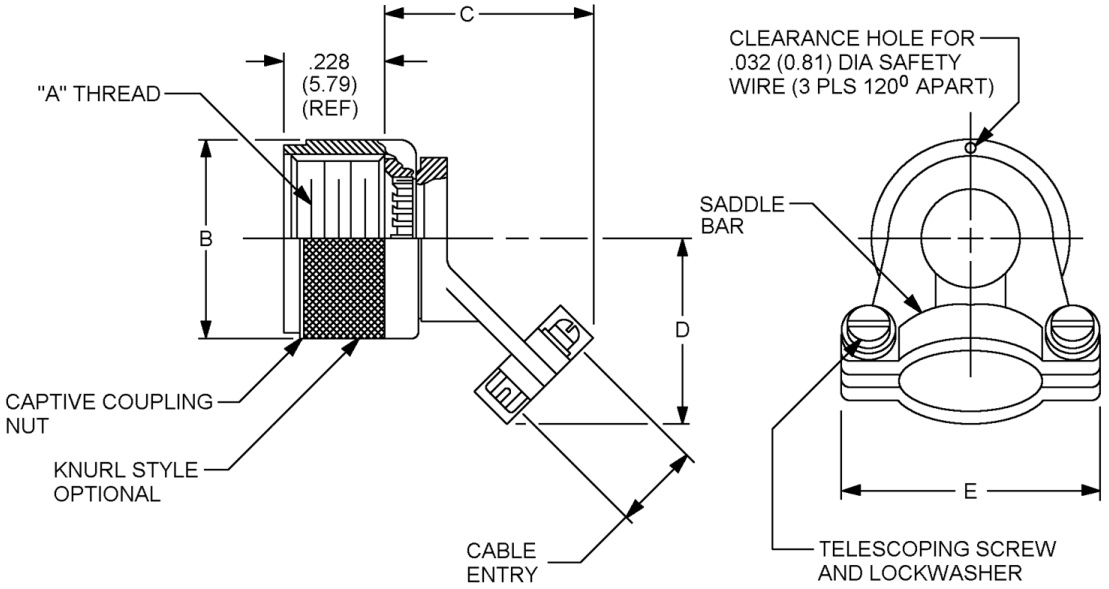

FIGURE 1. Dimensions and configurations.

Shell size designator (see note 3)	A thread class 2B	B max dia	C max closed	D max	E max	Screw size ref.	Cable entry	
							min	max
A (11)	.750-20 UNEF	1.028 (26.11)	1.650 (23.60)	.929 (23.60)	.903 (22.94)	.114-40	.177 (4.50)	.286 (7.26)
B (13)	.875-20 UNEF	1.141 (28.98)	1.650 (23.60)	.929 (23.60)	.977 (24.82)	.114-40	.177 (4.50)	.286 (7.26)
C (15)	1.000-20 UNEF	1.263 (32.08)	1.765 (44.60)	1.056 (26.82)	1.151 (29.24)	.114-40	.250 (6.35)	.416 (10.57)
D (17)	1.125-18 UNEF	1.387 (35.23)	1.874 (47.60)	1.233 (31.32)	1.281 (32.54)	.114-40	.291 (7.39)	.476 (12.09)
E (19)	1.250-18 UNEF	1.513 (38.43)	1.918 (48.72)	1.296 (32.92)	1.406 (35.71)	.114-40	.348 (8.84)	.626 (15.90)
F (23)	1.438-18 UNEF	1.703 (43.26)	1.962 (49.83)	1.358 (34.49)	1.576 (40.03)	.134-32	.429 (10.90)	.831 (21.11)
G (25)	1.562-18 UNEF	1.825 (46.36)	2.006 (50.95)	1.420 (36.07)	1.666 (42.32)	.134-32	.523 (13.28)	.956 (24.28)
H (29)	1.875-16 UN	2.143 (54.43)	2.301 (58.45)	1.634 (41.50)	2.046 (51.97)	.134-32	.643 (16.33)	1.081 (27.46)
J (33)	2.062-16 UNS	2.329 (59.16)	2.389 (60.68)	1.859 (47.22)	2.209 (56.11)	.162-32	.704 (17.88)	1.187 (30.15)

NOTES:

1. Dimensions are in inches. Dimensions apply after plating.
2. Metric equivalents are given for information only.
3. Shell sizes are provided within parentheses for information and are not a part of the designator.

FIGURE 1. Dimensions and configurations - Continued.

REQUIREMENTS:

Design and construction:
Dimensions and configurations: See figure 1.
Interface dimensions shall be in accordance with MIL-DTL-28840.
Material and finish shall be in accordance with MIL-DTL-28840 and table I herein.

TABLE I. Material and finish.

Material and finish designator	Material	Finish 1/
W	Aluminum alloy in accordance with ASTM-B85/B85M, ASTM-B26/B26M, ASTM-B108/B108M, ASTM-B209, ASTM-B211, or ASTM-B221	Cadmium plate, olive drab over electroless nickel 2/ 3/
D	Corrosion resistant steel in accordance with ASTM-A276, ASTM-A473, or ASTM-A580/A580M, type 316	Cadmium plate, black 2/ 3/
F	Aluminum alloy in accordance with ASTM-B85/B85M, ASTM-B26/B26M, ASTM-B108/B108M, ASTM-B209, ASTM-B211, or ASTM-B221	Pure electro-deposited aluminum, non-reflective
L		Tin-zinc, non-reflective
S		Zinc nickel, non-reflective 3/

1/ Lock washers and telescoping screws shall be stainless steel and passivated in accordance with SAE-AMS2700.
2/ See restrictions.
3/ See application notes.

Marking: The strain relief clamp shall be identified with the manufacturer's name or trademark and the Part or Identifying Number (PIN).

PIN example:

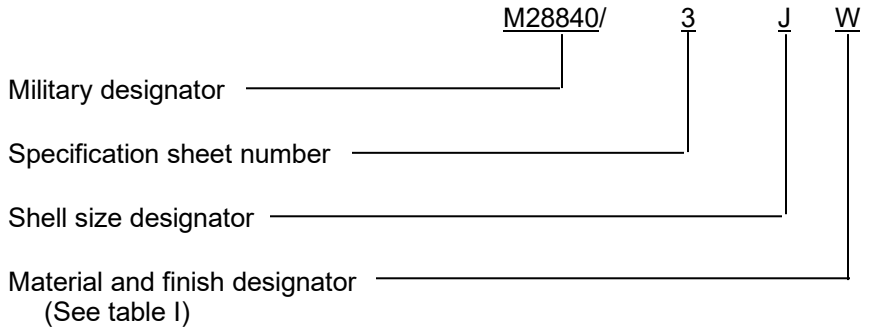

QUALIFICATION: Two samples in each shell size for which qualification is desired shall be tested in accordance with MIL-DTL-28840.

RESTRICTIONS:

Material and finish designators W and D are inactive for NAVSEA new design, unless approved by NAVSEA. Designators W and D are inactive for aircraft new design. Designators W and D shall not be used in oxygen or potable water systems. Additional restrictions are listed in MIL-DTL-28840.

APPLICATION NOTES:

Material and finish designators W and D have a hexavalent chromium conversion coat and are not recommended for Army ground systems. Cadmium type or zinc/ zinc alloy surface finishes are not compatible with hydraulic systems with synthetic fluids (see ASTM-MNL37, Fuels and Lubricants Handbook). Additional application notes are listed in MIL-DTL-28840.

Amendment notations. The margins of this specification are marked with vertical lines to indicate modifications generated by this amendment. This was done as a convenience only and the Government assumes no liability whatsoever for any inaccuracies in these notations. Bidders and contractors are cautioned to evaluate the requirements of this document based on the entire content irrespective of the marginal notations.

Referenced documents. In addition to MIL-DTL-28840, this document references the following:

ASTM-A276
ASTM-A473
ASTM-A580/A580M
ASTM-B26/B26M
ASTM-B85/B85M
ASTM-B108/B108M
ASTM-B209
ASTM-B211
ASTM-B221
ASTM-MNL37
SAE-AMS2700

CONCLUDING MATERIAL

Custodians:
Army - AT
Navy - EC
Air Force - 85
DLA - CC

Preparing activity:
DLA - CC

(Project 5935-2021-007)

Review activities:
Army – AV, MI
Navy - OS, SH, YD

NOTE: The activities listed above were interested in this document as of the date of this document. Since organizations and responsibilities can change, you should verify the currency of the information above using the ASSIST Online database at https://assist.dla.mil.