DEFENSE LOGISTICS AGENCY
LAND AND MARITIME
P.O. BOX 3990
COLUMBUS, OHIO 43218-3990

December 12, 2019

MEMORANDUM FOR MILITARY/INDUSTRY DISTRIBUTION

SUBJECT: Initial Draft of MIL-DTL-24728/9 Amendment 3 and, MIL-DTL-24728/10 Amendment 3; Project Numbers 6060-2020-001, -002.

The proposed initial drafts are being amended to replace canceled document (FED-STD-595) with superseding document SAE-AMS-STD-595.

The initial draft for the subject documents, dated 12 December 2019, is now available for viewing and downloading from the DLA Land and Maritime-VA Web site:

http://www.landandmaritimeapps.dla.mil/Programs/MilSpec/initialdrafts.aspx

Concurrence or comments are required at this Center within 30 days from the date of this letter. Late comments will be held for the next coordination of the document. Any further coordination concerning these documents will be circulated only to firms and organizations that furnish comments or reply that they have an interest. Comments from military departments must be identified as either "Essential" or "Suggested". Essential comments must be justified with supporting data. Military review activities should forward comments to their custodians of this office, as applicable, in sufficient time to allow for consolidating the department reply

The point of contact for this document is Mr. Ken Beymer, DLA Land and Maritime, VAT, Post Office Box 3990, Columbus, OH 43218-3990. Mr. Beymer can also be reached at 614-692-0557/850-0557, or by facsimile 614-692-6939/850-6939, or by e-mail to: ken.beymer@dla.mil

/ SIGNATURE ON FILE /

MICHAEL A. RADECKI
Chief
Electronics Component Team

METRIC

MIL-DTL-24728/9
W/AMENDMENT 3
DRAFT
SUPERSEDING
MIL-DTL-24728/9
W/AMENDMENT 2
8 January 2015

NOTE: This draft dated 12 December 2019, prepared by DLA-CC has not been Approved and is subject to modification.
DO NOT USE FOR ACQUISITION PURPOSES.

DETAIL SPECIFICATION SHEET

INTERCONNECTION BOX, CABLE ROUTING, FIBER OPTIC, SPRAYTIGHT, 712 X 1372 mm

This specification is approved for use by all Departments and Agencies of the Department of Defense.

The requirements for acquiring the product described herein shall consist of this specification sheet and MIL-I-24728.

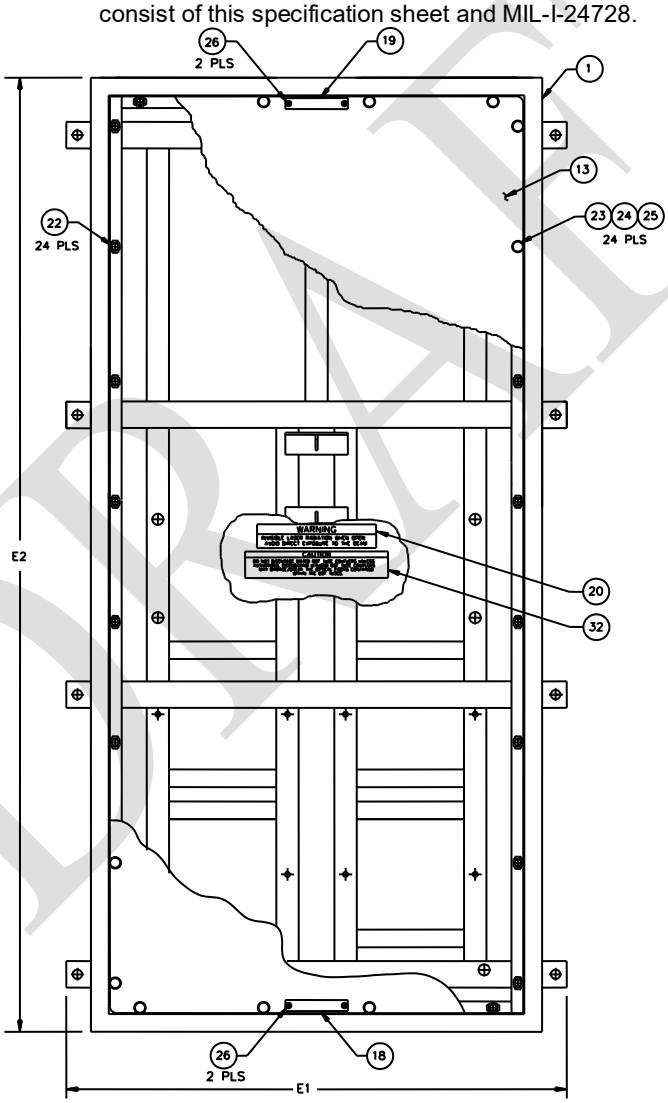

NOTE: For dimensions, see table I.

FIGURE 1. Enclosure assembly, cover shown partially removed.

DRAFT

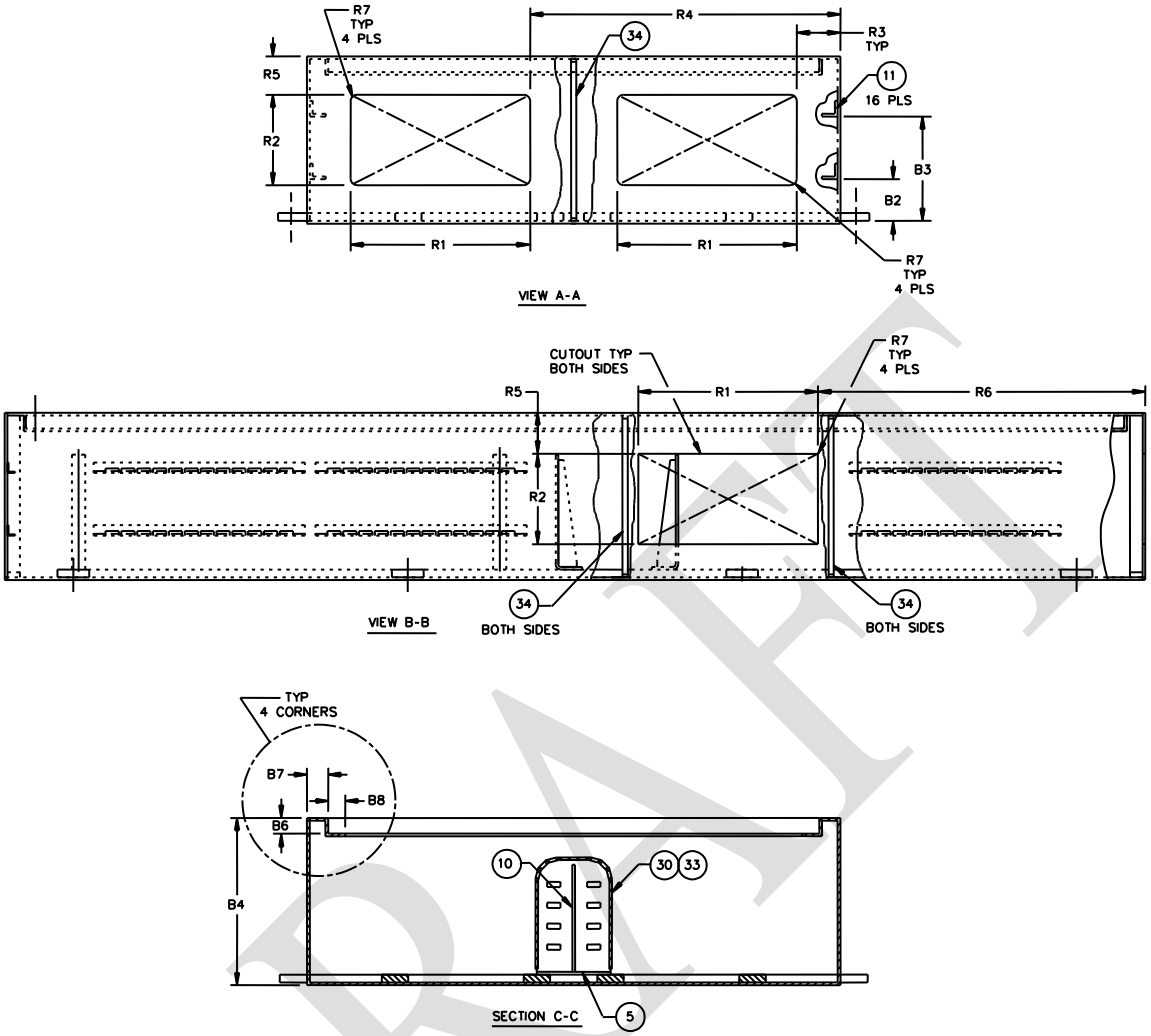

NOTES:

1. See figure 2 for location of sections and views.
2. For dimensions, see table I.
3. Cutouts can be used for optional multiple cable transit (MCT) devices.

FIGURE 1. Enclosure assembly, continued (side and end views with dimensions of cutouts).

DRAFT

TABLE I. Enclosure assembly dimensions.

Designator	Descriptions	Dimensions 1/			
		mm		Inches	
		nom	tol.	nom	tol.
B2	Channel bottom to lower tie wrap rail	50.8	±2.5	2.00	±.10
B3	Channel bottom to upper tie wrap rail	127.0	±2.5	5.00	±.10
B4	Box depth	204	max	8.0	max
B6	Top recess for cover	19.1	±2.5	.75	±.10
B7	Top lip	25.4	±2.5	1.00	±.10
B8	Lip to opening	20.6	±2.5	.81	±.10
E1	Width over mounting tabs	712	max	28.0	max
E2	Box height	1372	max	54.0	max
R1	MCT cutout width	215.9	±0.5	8.50	±.02
R2	MCT cutout height	110.0	±0.5	4.33	±.02
R3	Box side to MCT cutout	41.1	±0.5	1.62	±.02
R4	Box side to MCT cutout	384.3	±2.5	15.13	±.10
R5	Box top to MCT cutout	50.8	±2.5	2.00	±.10
R6	Box end to MCT cutout	393.7	±2.5	15.50	±.10
R7	Box MCT cutout inside radius	3.30	±0.38	.130	±.015

1/ Inch equivalents are given for information only.

DRAFT

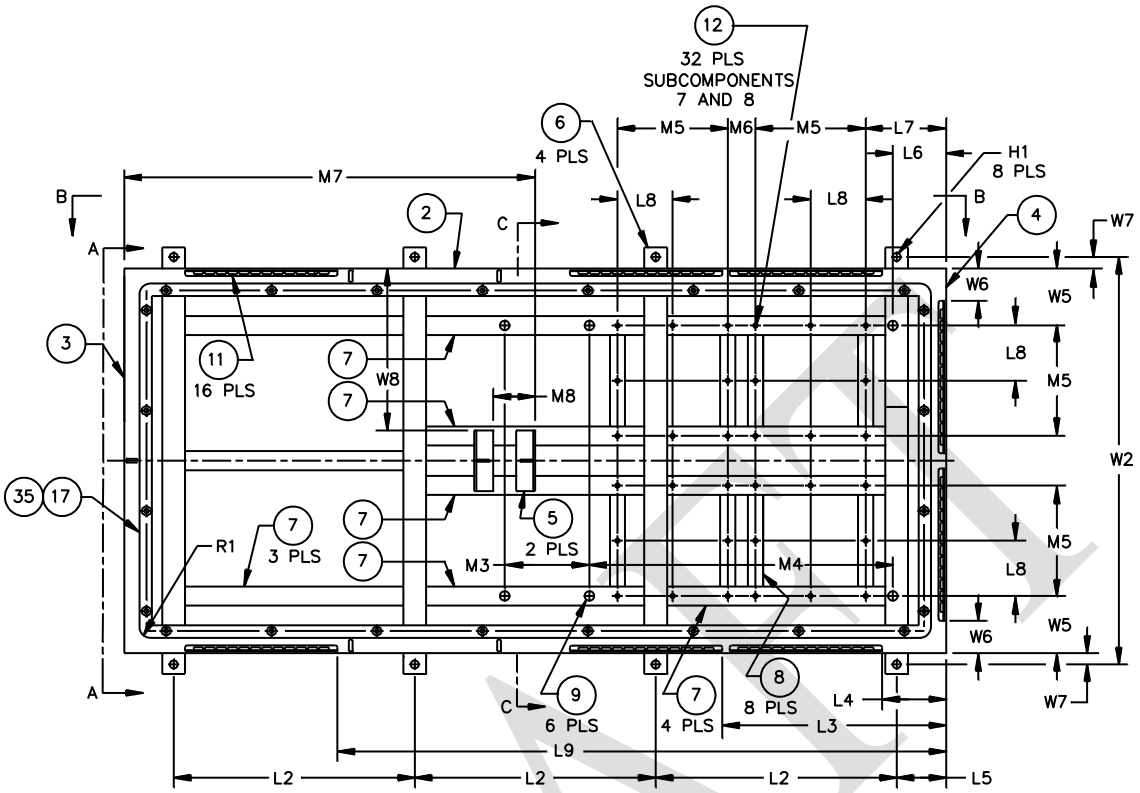

NOTES:

1. See figure 1 for sections and views.
2. For dimensions, see table II.
3. Mounting holes (H1) shall accommodate 1/2-13 UNC bolts.

FIGURE 2. Enclosure assembly (without cover).

DRAFT

TABLE II. Enclosure assembly (without cover), dimensions.

Designator	Descriptions	Dimensions 1/			
		mm		inches	
		nom	tol	nom	tol
L2	Box mounting hole CL to mounting hole CL	402.1	±2.5	15.83	±.10
L3	Tie wrap rail location	373.6	±2.5	14.71	±.10
L4	Tie wrap rail location	106.9	±2.5	4.21	±.10
L5	Box end to box mounting hole CL	82.6	±2.5	3.25	±.10
L6	Box end to routing post hole location CL	87.0	±2.5	3.40	±.10
L7	Box end to component mounting hole location CL	132.7	±2.5	5.22	±.10
L8	Component mounting hole CL to mounting hole CL	92.2	±1.0	3.63	±.04
L9	Tie wrap rail location	1016.0	±2.5	40.00	±.10
H1	Box mounting hole diameter	13.49	±0.13	.531	±.005
M3	Routing post hole CL location to CL hole location	141.2	±2.5	5.56	±.10
M4	Routing post hole CL location to CL hole location	506.5	±2.5	19.94	±.10
M5	Component mounting hole CL to mounting hole CL	184.2	±1.0	7.25	±.04
M6	Component mounting hole CL to mounting hole CL	46.2	±2.5	1.82	±.10
M7	Box end to bulkhead	685.8	±2.5	27.00	±.10
M8	Bulkhead to bulkhead	101.6	±2.5	4.00	±.10
R1	Inside radius, box gasket flange	Radius shall be such that it is not detrimental to the cover during shock.			
W2	Box mounting hole CL to hole CL	679.5	±2.5	26.75	±.10
W5	Box edge to routing post hole location CL	95.2	±2.5	3.75	±.10
W6	Tie wrap rail location	54.1	±2.5	2.13	±.10
W7	Box edge to box mounting hole CL	19.1	±2.5	.75	±.10
W8	Box edge to bulkhead	276.4	±2.5	10.88	±.10

1/ Inch equivalents are given for information only.

DRAFT

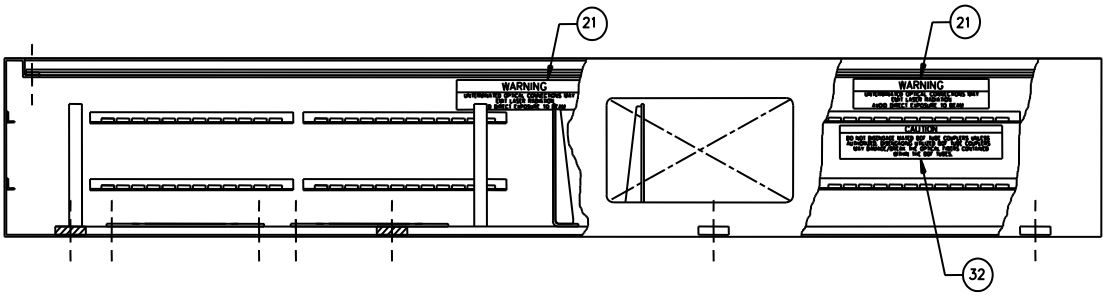

FIGURE 3. Box inside labels.

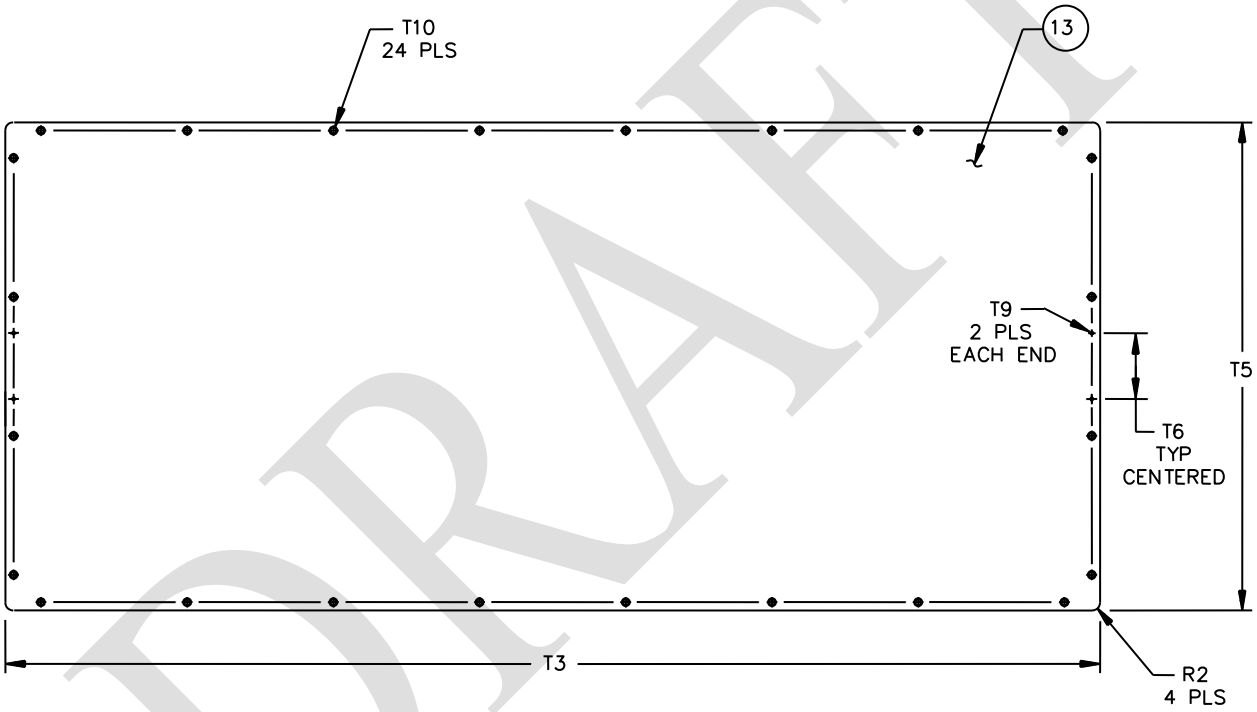

NOTE: For dimensions, see table III.

FIGURE 4. Cover.

DRAFT

TABLE III. Cover dimensions.

Designator	Descriptions	Dimensions 1/			
		mm		inches	
		nom	tol	nom	tol
R2	Cover radius	9.7	±0.4	.38	±.02
T3	Cover length	1317.8	±2.5	51.88	±.10
T5	Cover width	587.5	±2.5	23.13	±.10
T6	CL to CL nameplate mounting holes	79.38	±0.38	3.125	±.015
T9	Mounting hole, nameplate (tapped)			#6-32 UNC–2B	
T10	Cover bolt hole (tapped)			3/8-16 UNC	

1/ Inch equivalents are given for information only.

DRAFT

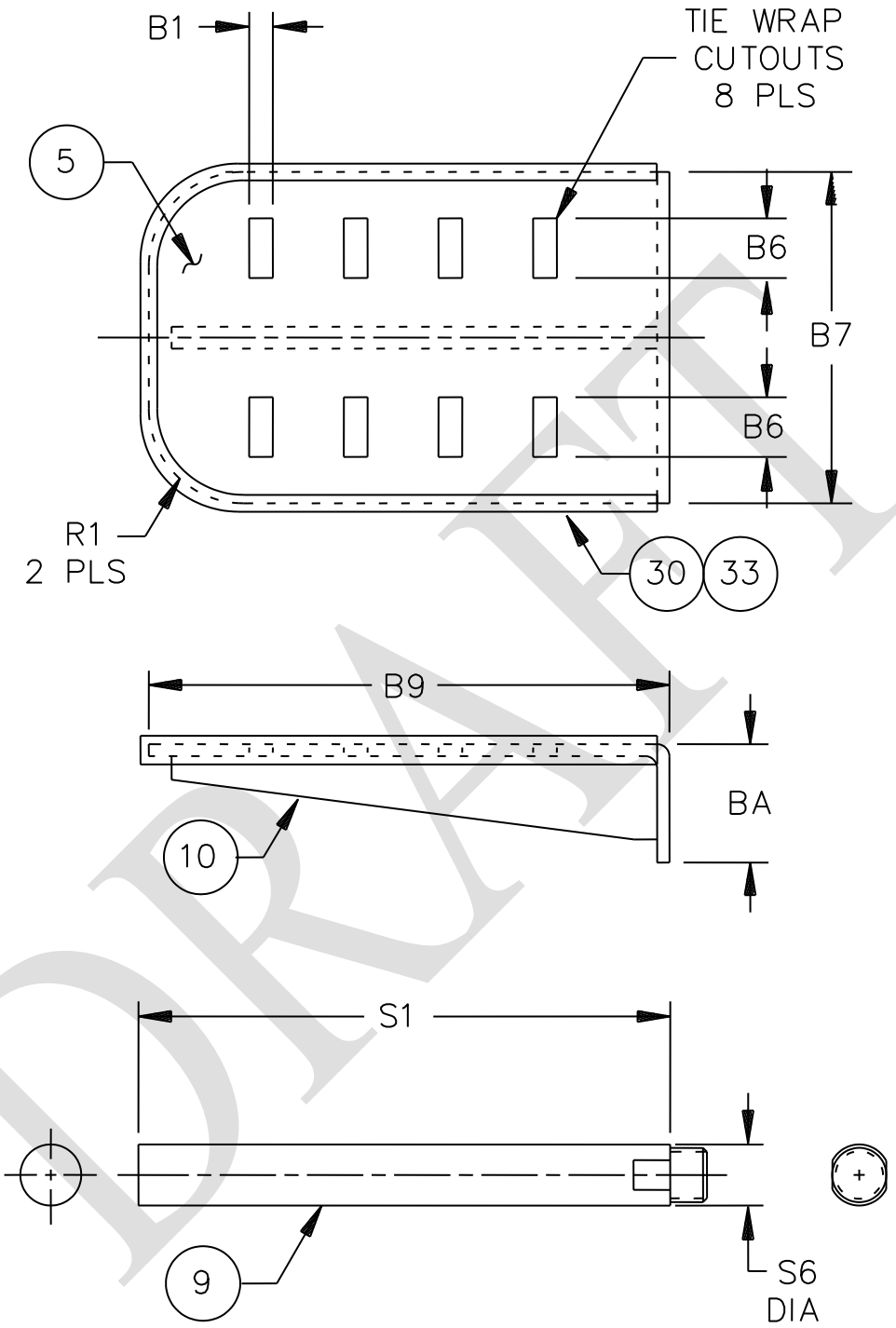

NOTE: For dimensions, see table IV.

FIGURE 5. Cable management pieces.

DRAFT

TABLE IV. Cable management pieces dimensions.

Designator	Descriptions	Dimensions 1/			
		mm		inches	
		nom	tol	nom	tol
B1	Bulkhead slot height	6.4	±0.4	.25	±.02
B6	Bulkhead slot width	16.0	±0.4	.63	±.02
B7	Bulkhead width	88.9	±2.5	3.50	±.10
B9	Bulkhead height	139.7	±2.5	5.50	±.10
BA	Bulkhead foot length	31.8	±2.5	1.25	±.10
R1	Bulkhead radius	25.4	±2.5	1.00	±.10
S1	Routing post length	139.7	±2.5	5.50	±..10
S6	Routing post diameter	16.0	±0.4	.63	±.02

1/ Inch equivalents are given for information only.

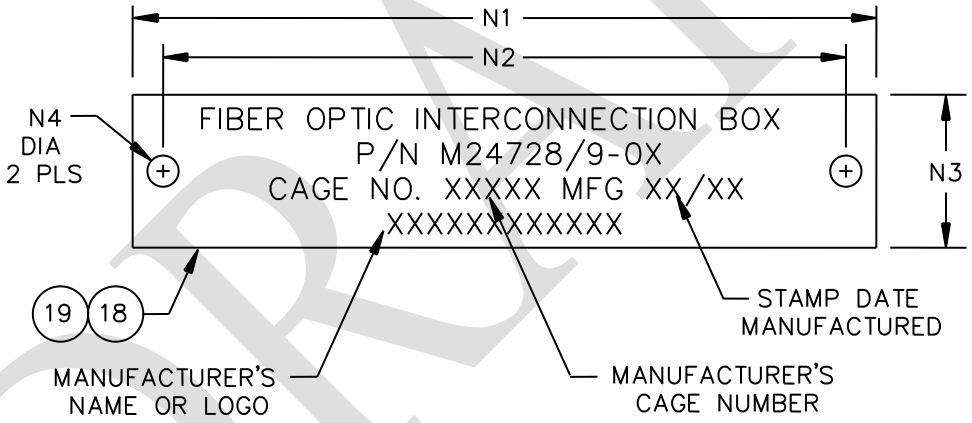

NOTES:
1. For dimensions see table V.
2. Corners should be radiused.
3. Same overall and mounting dimensions apply to both subcomponents 18 and 19. Subcomponent 19 nameplate is blank.

FIGURE 6. Manufacturer's nameplate.

DRAFT

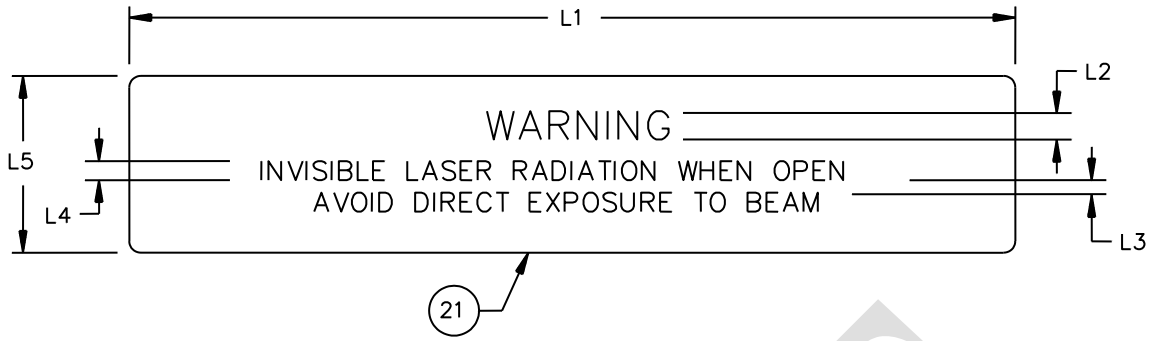

NOTES:
1. For dimensions see table V.
2. Corners should be radiused.
3. The signal word "WARNING" shall be in yellow on a black background in the upper panel. The lower panel shall consist of black letters on a yellow background.

FIGURE 7. Warning label (inside).

TABLE V. Manufacturer's nameplate and warning label (inside) dimensions.

Designator	Descriptions	Dimensions 1/			
		mm		inches	
		nom	tol	nom	tol
N1	Nameplate length	89	min	3.5	min
N2	Nameplate mounting hole location	79.38	±0.38	3.125	±.015
N3	Nameplate width	16.0	min	.63	min
N4	Nameplate mounting hole diameter	3.96	±0.13	.156	±.005
L1	Warning label length	127	min	5.0	min
L2	WARNING height	5.1	min	.20	min
L3	Lettering spacing	1.5	typ	.06	typ
L4	Lettering height	4.8	typ	.19	typ
L5	Warning label height	25	min	1.0	min

1/ Inch equivalents are given for information only.

DRAFT

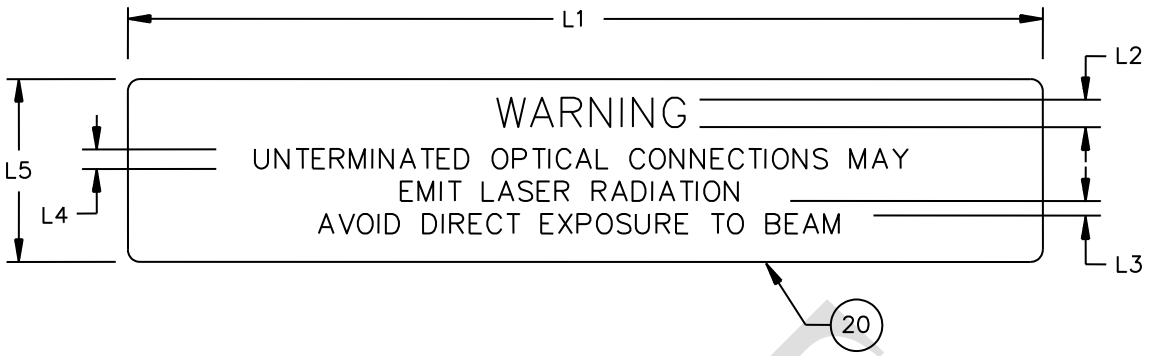

NOTES:

1. For dimensions see table VI.
2. Corners should be radiused.
3. The signal word “WARNING” shall be in yellow on a black background in the upper panel. The lower panel shall consist of black letters on a yellow background.

FIGURE 8. Warning label (outside).

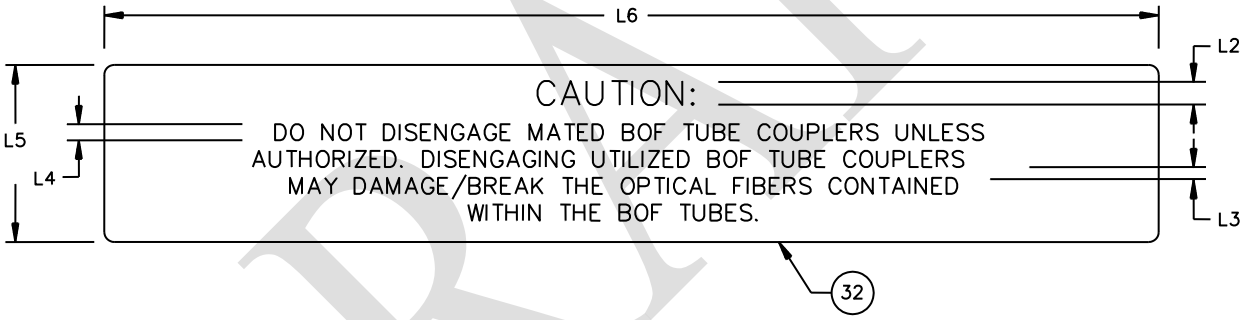

NOTES:

1. For dimensions see table VI.
2. Corners should be radiused.

FIGURE 9. Caution labels (inside and outside).

DRAFT

TABLE VI. Warning label (outside) and caution labels (inside and outside) dimensions.

Designator	Descriptions	Dimensions 1/			
		mm		inches	
		nom	tol	nom	tol
L1	Warning label length	127	min	5.0	min
L2	Title height	4.8	min	.19	min
L3	Lettering spacing	1.5	typ	.06	typ
L4	Lettering height	3.3	typ	.13	typ
L5	Label height	25	min	1.0	min
L6	Caution label length	150	min	5.9	min

1/ Inch equivalents are given for information only.

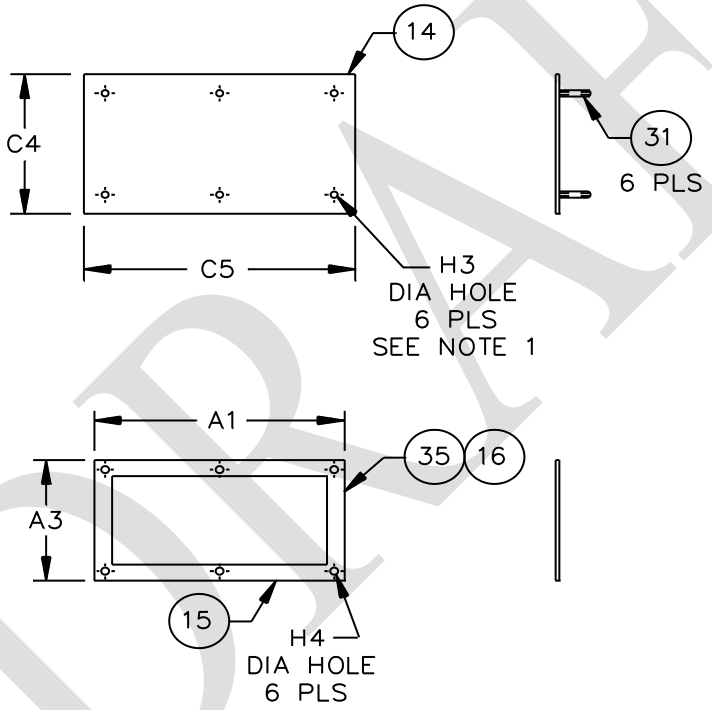

NOTES:

1. Do not deburr holes. Install subcomponent 31 near side 6 places.
2. For dimensions, see table VII.

FIGURE 10. Closeout plate assembly and backup plate.

DRAFT

TABLE VII. Closeout plate assembly and backup plate dimensions.

Designator	Descriptions	Dimensions 1/			
		mm		inches	
		nom	tol	nom	tol
A1	Backup plate length	226.3	±2.5	8.91	±.10
A3	Backup plate height	120.7	±.2.5	4.75	±.10
C4	Closeout plate height	139.7	±2.5	5.50	±.10
C5	Closeout plate length	245.4	±2.5	9.66	±.10
H3	Stud mounting hole diameter	6.3	typ	.25	typ
H4	Backup plate hole diameter	7.14	±0.13	.281	±.005

1/ Inch equivalents are given for information only.

DRAFT

TABLE VIII. Parts list.

Subcomponent Identification numbers, circled (see figure(s) 1 - 10)	Subcomponent name	Located in figure(s)	Quantity	Material (see notes)	Remarks (inches) 1/
1	Enclosure assy.	1	1		
2	Enclosure center	2	1	2	3.2 (.125) thk
3	Enclosure end	2	1	2	3.2 (.125) thk
4	Enclosure end	2	1	2	3.2 (.125) thk
5	Bulkhead	1, 2, 5	2	2	3.2 (.125) thk
6	Mounting bar	2	4	3	9.53 (.375) thk X 38.1 (1.50)
7	Mounting bar	2	11	3	9.53 (.375) thk X 31.8 (1.25)
8	Mounting bar	2	8	3	9.53 (.375) thk X 25.4 (1.00)
9	Routing post	2, 5	6	3	16.0 (.63) dia
10	Stiffener, bulkhead	1, 5	2	2	3.2 (.125) thk X 130.3 (5.13) X 22.4 (.88)
11	Tie wrap rail	1, 2	16	2	
12	Helical insert	2	32	4	1/4 - 20 UNC-2A X 1/4 long
13	Cover	1, 4	1	2	3.2 (.125) thk
14	Closeout plate assembly	10	4	2	3.2 (.125) thk 5/
15	Backup plate	10	4	2	3.2 (.125) thk
16	Gasket, closeout plate	10	4	6	3.3 (.13) thk X 25.4 (1.00)
17	Gasket, cover/box	2		6	7/
18	Nameplate	1, 6	1	8	MIL-DTL-15024
19	Nameplate, blank	1, 6	1	8	MIL-DTL-15024
20	Label, warning, outside	1, 8	1	9	MIL-DTL-15024
21	Label, warning, inside	3, 7	2	9	MIL-DTL-15024
22	Nut, self retaining	1	24	10	3/8-16 UNC-2B
23	Washer, seal	1	24	4	3/8
24	Bolt, hex head, slotted, captive	1	24	4	3/8-16 UNC-2A X 7/8 long
25	Washer, interference fit	1	24	15	3/8
26	Screw, nameplate	1	4	4	#6 -32 X 3/16 long

DRAFT

TABLE VIII. Parts list - Continued.

Subcomponent Identification numbers, circled (see figure(s) 1 - 10)	Subcomponent name	Located in figure(s)	Quantity	Material (see notes)	Remarks (inches) 1/
27	Washer, flat		24	4	1/4
28	Washer, split lock		24	4	1/4
29	Nut, hex		24	4	1/4-20 UNC-2B
30	Adhesive	1, 5	AR 11/	12	
31	Stud, self clinching	10	24	4	1/4–20 UNC-2A X 1.00 long
32	Label, caution	1, 3, 9	2	9	MIL-DTL-15024
33	Edging grommet	1, 5	2	13	333.8 (13.14) long
34	Stiffener, MCT	1	5	3	6.4 (.25) thk X 19.1 (.75) X 196.9 (7.75)
35	Adhesive	2, 10	AR 11/	14	

1/ Where appropriate, inch equivalents (shown in parenthesis) are given for information only.
2/ Aluminum 5052-H32 in accordance with ASTM B209.
3/ Aluminum 6061-T6 in accordance with ASTM B221.
4/ Stainless steel.
5/ Use with subcomponents 16, 27, 28 and 29.
6/ Rubber, MIL-PRF-6855, class 1, durometer 40. Rubber components are attached using adhesive (subcomponent 35).
7/ A gasket seal between the cover (subcomponent 13) and the enclosure assembly (subcomponent 1) is required.
8/ Aluminum QQ-A-250/1 or QQ-A-250/8 in accordance with MIL-DTL-15024.
9/ Metal foil, in accordance with MIL-DTL-15024, type G, adhesive backed.
10/ Zinc plated steel.
11/ AR - As Required.
12/ Cyanoacrylate.
13/ MS21266-3N, see NASM21266.
14/ Nitrile rubber cement.
15/ Rubber, MIL-PRF-6855, class 1, durometer 60.

SCOPE: The detail requirements specified herein cover a spraytight enclosure suitable for military fiber optic cable and connection use.

Part or identifying number (PIN): See sample below.

M	24728	/	9	-	XX
Military Designator	Basic Specification		Specification Sheet		PIN code (See table IX)

DRAFT

TABLE IX. PIN numbers.

PIN code	Description	Figure
01	Enclosure assembly, cover, and four (4) removable closeout plate assemblies (subcomponents 14, 15, and 16) with mounting hardware (subcomponents 27, 28, and 29).	1

REQUIREMENTS:

Design and construction: See figures 1 through 10 and tables I through VIII.

Materials: Unless otherwise specified, the enclosure assembly shall be constructed using the materials specified in table VIII.

Stress relief: Interconnection box shall be stress relieved in accordance with MIL-E-24142.

Finish: Enclosure shall have a chemical film, in accordance with MIL-DTL-5541, type II, class 1A (Alodine) prior to installing the helicoils in box assembly. Enclosure shall have one continuous film finish coat of grey polyester T GIC powder coating in accordance with MIL-PRF-24712, type IV, per PCI technical brief # 1, color 26307 of SAE-AMS-STD-595. The powder coat will have a minimum film thickness of 2 mil after curing. Finish coat shall be applied prior to installing all gaskets, labels, nameplates and plastic edging with adhesive.

Non-magnetic materials: Not applicable.

Cable interconnection interface: Cable entry whether through a removable MCT in accordance with MIL-DTL-24705/4 or nylon stuffing tubes in accordance with ASTM F1836M shall accept cables having outer diameters between 7.75 mm (.31 inch) and 32.5 mm (1.28 inch) constructed in accordance with MIL-PRF-85045.

Unless otherwise specified, the interconnection box shall have closeout plate assemblies with dimensions of 245.4 mm (9.66 inch) and 139.7 mm (5.50 inch) for installation in the interconnection box specified herein, in lieu of removable MCTs in accordance with MIL-DTL-24705/4 or nylon stuffing tubes in accordance with ASTM F1836M. These plates shall meet the requirements specified herein.

Mass: 54 kilograms (120 pounds) maximum.

Interconnection box mounting: See figure 2.

Interconnect organization:

Fiber, splice, connector identification: Not applicable.

Fiber optic interconnection modules: See table X.

DRAFT

TABLE X. Interconnection modules table.

	M24728/6	M24728/8-50	M24728/11-01
Max number of modules	4	4	4
Number of splice trays (Max splices per tray) 1/		16 (192)	32 (384)
Number of FO Connector adapters	192		

NOTE
1/ Assuming use of M24728/51 splice tray with 12 splices per tray.

Cable organization:

Tie wrap rails. Interconnection box shall include sixteen (16) tie wrap rails (see figures 1 and 2, subcomponent 11).

The tube routing region of the interconnection box shall provide for routing of MIL-PRF-85045 cables including blown optical fiber (BOF) tube cable. Tube routing region of interconnection box shall limit blown optical fiber tube bend diameter to 127 mm (5.0 inch) for 8 mm tubing and 102 mm (4.0 inch) for 5 mm tubing.

The interconnect region of interconnection box shall limit blown optical fiber tube bend diameter to 102 mm (4.0 inch) for 5 mm tubing. The interconnect region shall also limit the bend diameter of Optical Fiber Cable Components (OFCCs) as specified in MIL-PRF-85045/16.

Cable management within the enclosure shall be accomplished using bulkheads, routing posts and tie wrap rails (subcomponents 5, 9, and 11, respectively), see figure 2 for locations.

VERIFICATION.

Inspection routine: Applicable with the following modifications. Spraytight shall be performed prior to shock.

Qualification item configuration: The interconnection box shall have 1 removable MCT in accordance with MIL-DTL-24705/4 and 3 closeout plate assemblies.

Environmental/mechanical inspections:

Shock: Applicable with the following modifications.

a. Test setup, optical fiber splices assembled on M85045/16-02 in accordance with MIL-PRF-24623/6 stored in the splice tray and tray holder shall meet discontinuity requirements during the test and change in optical transmittance requirements after the test.

DRAFT

b. The following test conditions shall also apply:

(1) Fore-aft testing shall be performed in addition to normal and athwartship orientations,

(2) Use 90 degrees for athwartship and fore-aft testing,

(3) Total weight on anvil plate shall not exceed 3400 lbs.

(4) Testing shall be performed using hammer heights with anvil table travel limits specified in accordance with table XI.

TABLE XI. Fixed hammer heights and table travel limits

Fixed hammer height		Anvil table travel limit	
meter	Feet	millimeter	Inch
0.91	3.0	76.2	3.0
1.68	5.5	76.2	3.0
1.68	5.5	38.1	1.5

Vibration: Applicable with the following modification, vibration test shall be performed with optical fiber splices assembled on M85045/16-02 in accordance with MIL-PRF-24623/6 stored in the tray and tray holder and shall meet discontinuity during the test and change in optical transmittance requirements after the test.

Structural integrity: Applicable except the assembled interconnection box shall not have a resonant frequency less than the maximum frequency specified in MIL-STD-167/1 type 1.

Temperature/humidity cycling: Applicable with the following modification. Testing shall be performed in accordance with TIA/EIA-455-5, method B. The sub-cycle shall be included in the test. Change in optical transmittance is not applicable.

Temperature-life (life-aging): Applicable with the following modifications. Testing shall be performed in accordance with TIA/EIA-455-4. Change in optical transmittance is not applicable. The following special test conditions and modifications to TIA/EIA-455-4 shall apply to these tests:

a. The specimen shall be exposed to dry air at 85 +3 /-0 °C (185 +5 /-0 °F), for a period of 240 hours.

b. Post test dimensional inspection shall be limited to E1, E2, and B4 (see figure I and table I) and T3 and T5 (see figure 4 and table III).

Thermal shock: Applicable with the following modifications. Testing shall be performed in accordance with TIA-455-71, using test condition C-0. Post test dimensional inspection shall be limited to E1, E2, and B4 (see figure 1 and table I) and T3 and T5 (see figure 4 and table III). Change in optical transmittance is not applicable.

DRAFT

Operating temperature: Applicable with the following modifications. Optical fiber splices in accordance with MIL-PRF-24623/6 stored in the tray and tray holder shall meet the change in optical transmittance requirements. Testing shall be performed in accordance with TIA-455-3 using the test condition schedule and soak times in accordance with table XII. The change in optical transmittance shall be measured during and after the test. A post test visual examination of the test specimens shall reveal no leakage of waterproofing compounds or other apparent loss of sealing capability, no surface or identification marking impairment, nor any damage detrimental to the operation of the test specimens. The operating temperature range shall be as specified herein.

TABLE XII. Temperature cycling steps.

Step	Action	Temperature °C (°F)	Duration
1	Maintain	Room ambient	4 hours (minimum)
2	Ramp to	Low operating temp +0/-3 (+0/-5)	2 hours
3	Maintain	Low operating temp +0/-3 (+0/-5)	8 Hours (minimum)
4	Ramp to	25 ±3 (77 ± 5)	2 hours
5	Maintain	25 ±3 (77 ± 5)	8 hours (minimum)
6	Ramp to	High operating temp +0/-3 (+0/-5)	1 hour
7	Maintain	High operating temp +0/-3 (+0/-5)	8 hours (minimum)
8	Ramp to	25 ±3 (77 ± 5)	1 hour
9	Maintain	25 ±3 (77 ± 5)	8 hours (minimum)
10	Repeat steps 2 through 9, four additional times, for a total of five (5) cycles.		

Change in transmittance: Applicable with the following modification. The change in optical transmittance of connector and splice installed in the fiber optic interconnection box in a standard manner shall not be greater than the maximum specified value of change in optical transmittance of the component specification.

Discontinuity: No discontinuity shall occur when tested in accordance with TIA-455-32 using equipment having a time resolution sufficient to resolve discontinuities of duration not less than 50 microseconds. A discontinuity is considered to be a reduction of signal strength defined by the component specification and for a duration defined by the component specification.

Cable retention: Not applicable.

Cable seal flexing: Not applicable.

Cable twist: Not applicable.

Compression resistance: Not applicable.

Impact: Not applicable.

Water pressure: Spraytight. The enclosure shall meet requirements as specified in MIL-STD-108, table II.

DRAFT

Fluid Immersion: Applicable.

Flammability: Not applicable.

Salt spray: Not applicable.

Flame spread: Not applicable.

Fungus: Applicable with the following modification. Subcomponents composed of materials not listed as fungus inert in guideline 4 of MIL-HDBK-454 shall be tested in accordance with TIA-455-56. The polymeric materials shall show sparse or very restricted microbial growth and reproduction with minor or inhibited substrate utilization. There shall be little or no chemical, physical, or structural change detectable.

Temperature:	Operating:	-28 to +65°C	(-18.4 to +149°F)
	Storage:	-40 to +70°C	(-40 to +158°F)

Cover/box gasket (subcomponent 17) position is optional, but the gasket shall be one piece and not be damaged by, or impede removal or installation of, the interconnection box cover (subcomponent 13) and shall pass all requirements.

The closeout plate gasket (subcomponent 16) size is 139.7 mm (5.50 in) wide x 245.4 mm (9.66 in) long.

Removable MCT frames and compatible insert blocks are specified in MIL-DTL-24705/4.

Intended use:

The box has been designed with the tube routing region to accommodate a maximum of 22 MIL-PRF-85045/25 blown optical fiber tube cables. The tube routing region of the interconnection box should be used for routing and interconnecting of blown optical fiber tube cable.

The box also contains an interconnect region intended for the routing of OFCCs and 5 mm blown optical fiber tubing. The interconnect region shall have sufficient area and mounting capacity to accommodate four (4) M24728/6 (see MIL-I-24728/6) connector adapter panels, four (4) M24728/8-50 (see MIL-DTL-24728/8) splice tray holders, or four (4) M24728/11-01 (see MIL-DTL-24728/11) splice tray holders or any combination of these components four (4) units maximum).

DRAFT

Amendment notations. The margins of this specification are marked with vertical lines to indicate modifications generated by this amendment. This was done as a convenience only and the Government assumes no liability whatsoever for any inaccuracies in these notations. Bidders and contractors are cautioned to evaluate the requirements of this document based on the entire content irrespective of the marginal notations.

Referenced documents; In addition to MIL-I-24728, this specification sheet references the following documents:

MIL-HDBK-454	MIL-I-24728/6	ASTM B221
SAE-AMS-STD-595/26307	MIL-DTL-24728/8	ASTM F1836M
MIL-DTL-5541	MIL-DTL-24728/11	NASM21266
MIL-PRF-6855	MIL-PRF-85045	TIA-455-3
MIL-DTL-15024	MIL-PRF-85045/16	TIA/EIA-455-4
MIL-E-24142	MIL-PRF-85045/25	TIA/EIA-455-5
MIL-PRF-24623/6	MIL-STD-108	TIA-455-32
MIL-DTL-24705/4	MIL-STD-167/1	TIA-455-56
MIL-PRF-24712	ASTM B209	TIA-455-71

Custodians:
Army - CR
Navy - SH
Air Force - 85
DLA - CC
NASA - NA

Preparing activity:
DLA - CC

(Project 6099-2020-001)

Review activities:
Army - AR, MI
Navy - AS, CG, EC, MC
Air Force - 19, 93

NOTE: The activities listed above were interested in this document as of the date of this document. Since organizations and responsibilities can change, you should verify the currency of the information above using the ASSIST Online database at https://assist.dla.mil.

DRAFT