INCH-POUND

MIL-DTL-24308/27E
w/AMENDMENT 2
1 December 2021
SUPERSEDING
MIL-DTL-24308/27E
w/AMENDMENT 1
9 April 2013

DETAIL SPECIFICATION SHEET

CONNECTORS, ELECTRIC, RECTANGULAR, MINIATURE, POLARIZED SHELL, RACK AND PANEL, INSULATION DISPLACEMENT CONNECTOR TYPE, SOCKET CONTACTS, NONENVIRONMENTAL

This specification is approved for use by all Departments and Agencies of the Department of Defense.

The requirements for acquiring the product described herein shall consist of this specification sheet and MIL-DTL-24308.

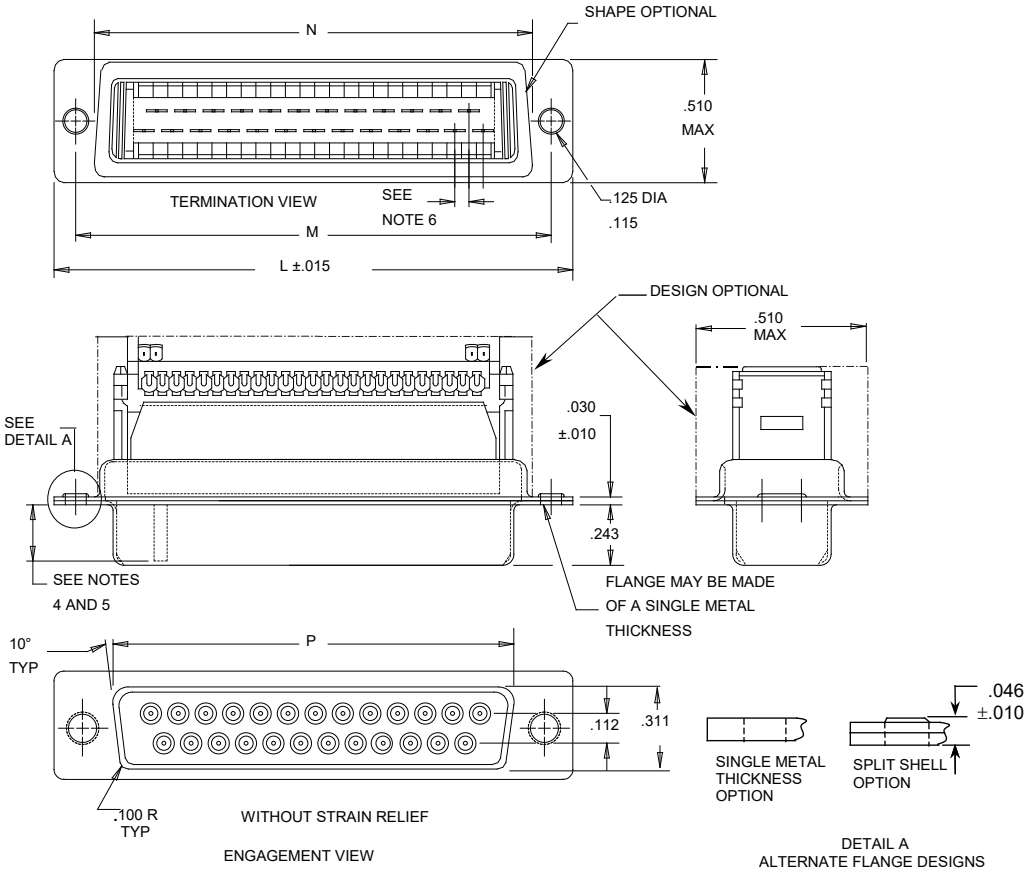

FIGURE 1. Dimensions and configuration.

AMSC N/A FSC 5935

DISTRIBUTION STATEMENT A. Approved for public release. Distribution is unlimited.

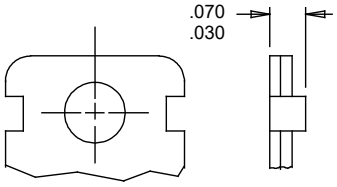

ALTERNATE METHOD
OF SECURING SHELL

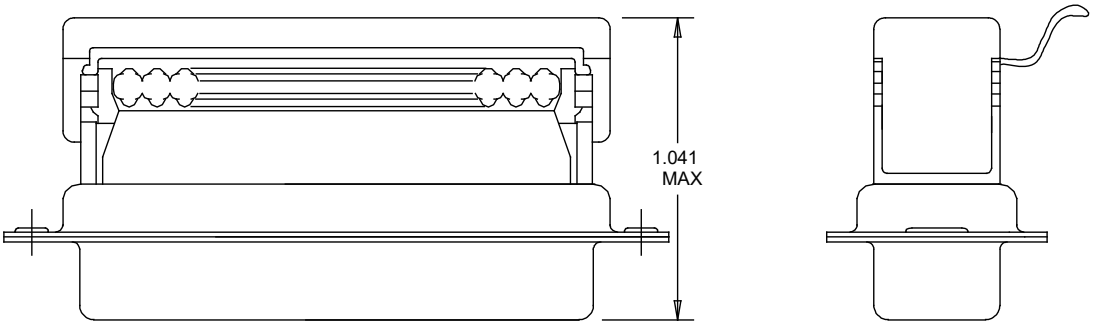

Inches	mm	Inches	mm	Inches	mm
.010	0.25	.070	1.78	.243	6.17
.015	0.38	.100	2.54	.311	7.90
.030	0.76	.112	2.84	.422	10.72
.046	1.17	.115	2.92	.494	12.55
.050	1.27	.125	3.18	1.030	26.16

NOTES:
1. Dimensions are in inches.
2. Metric equivalents are given for information only.
3. Unless otherwise specified tolerances are ±.005 (0.13mm) for three place decimals and ±.01 (0.25mm) for two place decimals.
4. Use .041/.039 (1.04/0.99mm) diameter pin.
5. Depth of hole is .143 (3.63mm) minimum as measured with square ended test pin.
6. Interface - Round conductor flat cable on .050 (1.27mm) centers.
7. Mating end of contact size 20.

FIGURE 1. Dimensions and configuration - Continued.

REQUIREMENTS:

Design and construction:

Dimensions and configuration: See figure 1 and table I.

Mating connector: MIL-DTL-24308/3, MIL-DTL-24308/4, MIL-DTL-24308/7, MIL-DTL-24308/8, MIL-DTL-24308/9, MIL-DTL-24308/28.

Conductor accommodation: 28 AWG stranded round conductor flat cable with conductors on .050 inch (1.27mm) centers.

Contact plating shall be in accordance with MIL-DTL-24308 for solder contacts.

Contact retention: Not applicable.

TABLE I. Dash numbers and characteristics.

Dash Number	Shell size	Number of contacts	Dimensions 1/				
			L ±.015 (0.38)	M	N Max	P	Insert arrangement 2/
-01	1	9	1.213 (30.81)	.984 (24.99)	.769 (19.53)	.643 (16.33)	A-1-1
-02	2	15	1.541 (39.14)	1.312 (33.32)	1.093 (27.76)	.971 (24.66)	A-2-1
-03	3	25	2.088 (53.04)	1.852 (47.04)	1.635 (41.53)	1.511 (38.38)	A-3-1
-04	4	37	2.729 (69.32)	2.500 (63.50)	2.282 (57.96)	2.159 (54.84)	A-4-1

1/ Metric equivalents are given for general information only.
2/ See MIL-DTL-24308 Appendix A for insert arrangements.

Materials:

Contacts: Any suitably conductive copper based alloy.

Strain relief: Polyester in accordance with ASTM D5927 or MIL-M-24519 or 300 series stainless steel or an equivalent industry standard.

Insert material: Polyester glass filled 15 percent or type GPT- 15F in accordance with MIL-M-24519.

Part or Identifying Number (PIN): Consists of the letter M, the basic number of the specification sheet, and a dash number compiled from the code.

PIN example: M24308/27 -01 F

Specification sheet number

Dash sheet number from table I

Finish: For class G and N:

A = Pure electrodeposited aluminum
F – Cadmium
K = Zinc nickel
P - Passivated stainless steel
T = Nickel fluorocarbon polymer
Z = Zinc

Amendment notations. The margins of this specification are marked with vertical lines to indicate modifications generated by this amendment. This was done as a convenience only and the Government assumes no liability whatsoever for any inaccuracies in these notations. Bidders and contractors are cautioned to evaluate the requirements of this document based on the entire content irrespective of the marginal notations.

Referenced documents. In addition to MIL-DTL-24308, this document references the following:

MIL-DTL-24308/3
MIL-DTL-24308/4
MIL-DTL-24308/7
MIL-DTL-24308/8
MIL-DTL-24308/9
MIL-DTL-24308/28
MIL-M-24519
ASTM D5927

CONCLUDING MATERIAL

Custodians:
Army - CR
Navy - EC
Air Force - 85
NASA - NA
DLA - CC

Review activities:
Army - AT, AV, CR4, MI
Navy - AS, CG, MC, SH

Preparing activity:
DLA - CC

(Project 5935-2022-013)

NOTE: The activities listed above were interested in this document as of the date of this document. Since organizations and responsibilities can change, you should verify the currency of the information above using the ASSIST Online database at https://assist.dla.mil.