INCH-POUND

MS51892B
w/ Amendment 1
12 March 2021
SUPERSEDING
MS51892B
24 September 2018

DETAIL SPECIFICATION SHEET

TEE, TUBE TO BOSS, BOSS ON BRANCH, O-RING, FLARELESS TYPE, HYDRAULIC

This specification is approved for use by all Departments and Agencies of the Department of Defense.

The requirements for acquiring the product described herein shall consist of this specification sheet and MIL-DTL-18866.

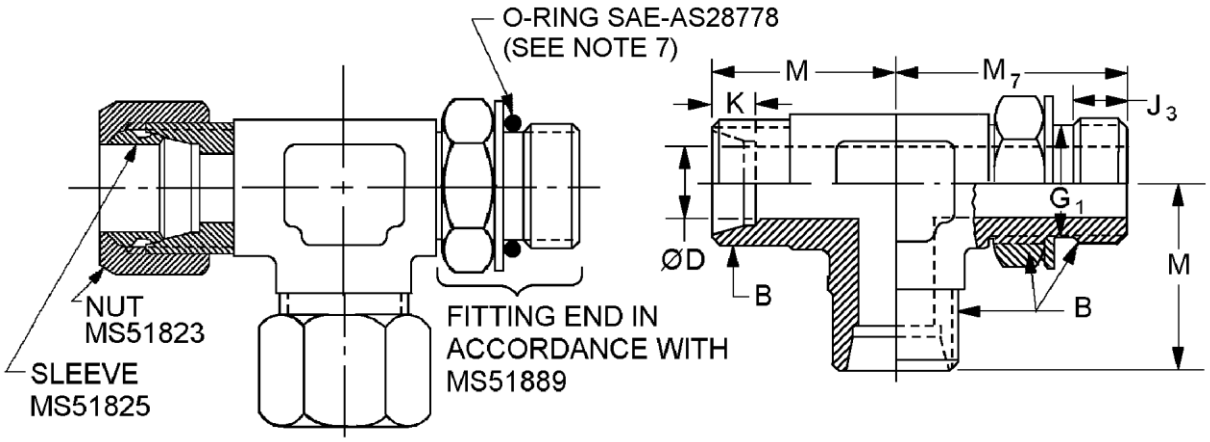

See notes at end of figure.

FIGURE 1. Tee, tube to boss, boss on branch O-ring, flareless.

Dash number		Tube OD nom.	B Straight thread ASME B1.1	D diameter drill inches (mm)	G_1 +.002 (0.05) -.003 (0.08) inches (mm)
Assembly	Body (see note 8)				
-1	-21	.1250 (3.175)	.3125-24 UNF-2A	.093 (2.36)	.250 (6.35)
-2	-22	.1875 (4.763)	.3750-24 UNF-2A	.125 (3.18)	.313 (7.95)
-3	-23	.2500 (6.350)	.4375-20 UNF-2A	.203 (5.16)	.364 (9.25)
-4	-24	.3125 (7.938)	.5000-20 UNF-2A	.234 (5.94)	.427 (10.85)
-5	-25	.3750 (9.525)	.5625-18 UNF-2A	.281 (7.14)	.482 (12.24)
-6	-26	.5000 (12.700)	.7500-16 UNF-2A	.422 (10.72)	.660 (16.76)
-7	-27	.6250 (15.875)	.8750-14 UNF-2A	.500 (12.70)	.773 (19.63)
-8	-28	.7500 (19.050)	1.0625-12 UN-2A	.656 (16.66)	.945 (24.00)
-9	-29	.8750 (22.225)	1.1875-12 UN-2A	.718 (18.24)	1.070 (27.18)
-10	-30	1.0000 (25.400)	1.3125-12 UN-2A	.875 (22.23)	1.195 (30.35)
-11	-31	1.2500 (31.750)	1.6250-12 UN-2A	1.093 (27.76)	1.507 (38.28)
-12	-32	1.5000 (38.100)	1.8750-12 UN-2A	1.344 (34.14)	1.756 (44.60)
-13	-33	2.0000 (50.800)	2.500-12 UN-2A	1.813 (46.05)	2.381 (60.48)

Dash number		J_3 Full thread ±.005 (0.13) inches (mm)	K +.015 (1.91) -.005 (0.13) inches (mm)	M ±.030 (0.76) inches (mm)	M_7 ±.030 (0.76) inches (mm)
Assembly	Body (see note 8)				
-1	-21	.234 (5.94)	.188 (4.78)	.770 (19.56)	.910 (23.11)
-2	-22	.234 (5.94)	.234 (5.94)	.830 (21.08)	.940 (23.88)
-3	-23	.281 (7.14)	.234 (5.94)	.890 (22.61)	1.030 (26.16)
-4	-24	.281 (7.14)	.250 (6.35)	.950 (24.13)	1.090 (27.69)
-5	-25	.312 (7.92)	.250 (6.35)	1.060 (26.92)	1.250 (31.75)
-6	-26	.344 (8.74)	.305 (7.75)	1.250 (31.75)	1.450 (36.83)
-7	-27	.391 (9.93)	.350 (8.89)	1.450 (36.83)	1.700 (43.18)
-8	-28	.469 (11.91)	.350 (8.89)	1.660 (42.16)	1.940 (49.28)
-9	-29	.469 (11.91)	.350 (8.89)	1.730 (43.94)	2.000 (50.80)
-10	-30	.469 (11.91)	.415 (10.54)	1.810 (45.97)	2.050 (52.07)
-11	-31	.469 (11.91)	.415 (10.54)	2.060 (52.32)	2.250 (57.15)
-12	-32	.469 (11.91)	.485 (12.32)	2.330 (59.18)	2.390 (60.71)
-13	-33	.469 (11.91)	.485 (12.32)	3.060 (77.72)	2.890 (73.41)

NOTES:
1. Dimensions are in inches.
2. Metric equivalents are given for information only.
3. Break all sharp edges and remove all burrs and slivers.
4. Dimensions and tolerances not shown shall be in accordance with SAE-J514 for flareless fittings.
5. The drawing is for identification purposes only and is not intended to restrict designs and shapes not dimensioned.
6. Procure O-ring separately and install before installation of the fittings.
7. Bodies will be used for production only and shall not be stocked for maintenance.

FIGURE 1. Tee, tube to boss, boss on branch O-ring, flareless - Continued.

REQUIREMENTS:

Fittings shall be as specified on figure 1.

Materials shall be in accordance with MIL-DTL-18866.

Finish and finish designators shall be in accordance with MIL-DTL-18866.

Unless otherwise specified in MIL-DTL-18866, all plating's shall be capable of meeting a minimum of 96 hours salt spray test in accordance with ASTM B117. The fittings shall show no evidence of red corrosion after 96 hours of salt spray. Fluid passages, other openings and internal threads shall not be subject to the plating thickness requirement and may have bare areas provided they are protected with a light film of oil.

Maximum operating pressure. Maximum operating pressure shall be in accordance with SAE-J514.

PIN: The PIN consists of the letters "MS", the specification number, dash number for tee size, letter for material finish designator, and sleeve style.

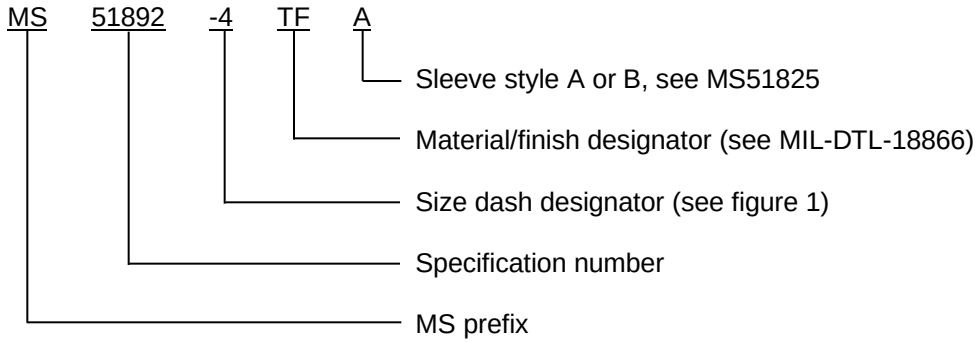

PIN example: MS51892-4TF indicates a tee, tube to boss, .3125 inch (7.938 mm) tube OD, titanium with fluoride phosphate coating, sleeve style A.

Marking shall be in accordance with MIL-DTL-18866.

Class I and II ozone depleting substances (ODS) shall not be used in MS51892 or any referenced procedures.

Order of precedence. Unless otherwise noted herein or in the contract, in the event of a conflict between the text of this document and the references cited herein, the text of this document takes precedence. Nothing in this document, however, supersedes applicable laws and regulations unless a specific exemption has been obtained.

Referenced documents shall be of the issue in effect on date of invitations for bid.

Material designator "SS" has been replaced by "S".

Phosphate coating finish "P" has been replaced by "KA".

NOTE: The following restrictions do not apply to manufactures of the fittings and is applicable only to OEM's and users.

Cadmium is not recommended. To the users of this document, it is recommended that the use of carbon steel material with cadmium plating be used only when other materials and finishes specified in this document cannot meet performance requirements.

Army and Marine ground forces zinc plating's. PIN codes FC, FD, Z, and ZC finishes have a chromate conversion coating which includes hexavalent chromium and are not recommended for Army and Marine ground systems. The use of coatings depositing hexavalent chromium for Army vehicles is prohibited unless otherwise explicitly stated in the contract as a requirement. For new designs PIN codes FC, FD, Z, and ZC are not to be supplied to Army and Marine ground forces. MIL-PRF-32647 Type KA is intended as a hazardous free plating material and is a direct replacement for zinc plating with a hexavalent chromium conversion coating. KA has an equivalent torque/tension as the plating's replaced.

Army and Marine ground vehicles. The use of cadmium plating for Army and Marine ground vehicles is prohibited unless otherwise explicitly stated in the contract as a requirement.

Army ground vehicle applications cadmium plating. Pin code J or KB may be substituted for cadmium ("Blank" PIN code) for Army ground vehicle applications. MIL-PRF-32647 Type KB is intended as a hazardous free plating material and is a direct replacement for cadmium plating ("Blank" PIN code). KB has an equivalent torque/tension as cadmium.

NAVSEA shipboard owned equipment. Cadmium is prohibited from use in NAVSEA-owned shipboard systems in accordance with the requirements of T9070-AL-DPC-020/077-2, unless otherwise approved by NAVSEA.

Changes from previous issue. The margins of this specification are marked with vertical lines to indicate where changes from the previous issue were made. This was done as a convenience only and the Government assumes no liability whatsoever for any inaccuracies in these notations. Bidders and contractors are cautioned to evaluate the requirements of this document based on the entire content irrespective of the marginal notations and relationship to the previous issue.

Referenced documents. In addition to MIL-DTL-18866, this document references the following:

MIL-PRF-32647	MS51889	SAE-AS28778
MS51823	ASME B1.1	SAE-J514
MS51825	ASTM B117	T9070-AL-DPC-020/077-2

CONCLUDING MATERIAL

Custodians:
Army - AR
Navy - SH
Air Force – 71
DLA - CC

Review activities:
Army - AT
Navy - AS, MC, OS

Preparing activity:
DLA - CC

(Project 4730-2021-022)

NOTE: The activities listed above were interested in this document as of the date of this document. Since organizations and responsibilities can change, you should verify the currency of the information above using the ASSIST Online database at https://assist.dla.mil.