INCH-POUND

MS51855E
20 November 2020
SUPERSEDING
MS51855D
25 July 2018

DETAIL SPECIFICATION SHEET

# FITTINGS, HYDRAULIC TUBE, FLARELESS TYPE, 90 DEGREE ELBOW, BULKHEAD

This specification is approved for use by all Departments and Agencies of the Department of Defense.

The requirements for acquiring the product described herein shall consist of this specification sheet and MIL-DTL-18866.

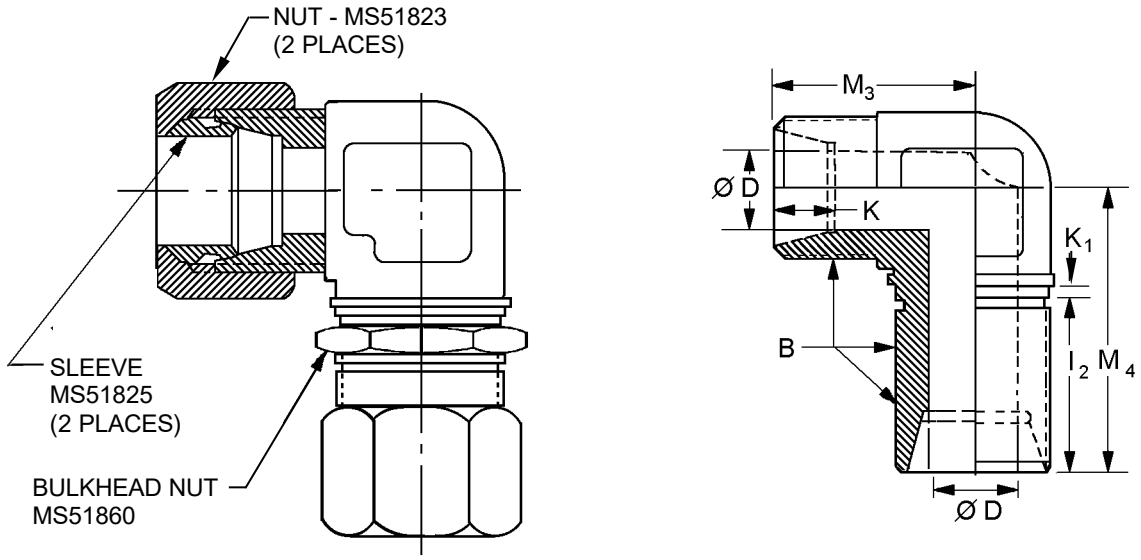


See notes at end of figure.

FIGURE 1. 90°Elbow, bulkhead.

| Dash number (see note 5) | | Tube OD Nom inches (mm) | B Straight thread ASME B1.1 Class 2A | D Diameter drill inches (mm) | $G_1$ inches (mm) +.002 (0.05) -.003 (0.08) |
|---|---|---|---|---|---|
| Assembly | Body | | | | |
| -1 | -2 | .1250 (3.175) | .3125 - 24UNF | .093 (2.36) | .250 (6.35) |
| -3 | -4 | .1875 (4.763) | .3750 - 24UNF | .125 (3.18) | .313 (7.95) |
| -5 | -6 | .2500 (6.350) | .4375 - 20UNF | .203 (5.16) | .364 (9.25) |
| -7 | -8 | .3125 (7.936) | .5000 - 20UNF | .234 (5.94) | .427 (10.85) |
| -9 | -10 | .3750 (9.525) | .5625 - 18UNF | .281 (7.14) | .482 (12.24) |
| -11 | -12 | .5000 (12.700) | .7500 - 16UNF | .422 (10.72) | .660 (16.76) |
| -13 | -14 | .6250 (15.875) | .8750 - 14UNF | .500 (12.70) | .773 (19.63) |
| -15 | -16 | .7500 (19.050) | 1.0625 - 12UN | .656 (16.66) | .945 (24.00) |
| -17 | -18 | .8750 (22.225) | 1.1875 - 12UN | .718 (18.24) | 1.070 (27.18) |
| -19 | -20 | 1.0000 (25.400) | 1.3125 - 12UN | .875 (22.23) | 1.195 (30.35) |
| -21 | -22 | 1.2500 (31.750) | 1.6250 - 12UN | 1.093 (27.76) | 1.507 (38.28) |
| -23 | -24 | 1.5000 (38.100) | 1.8750 - 12UN | 1.344 (34.14) | 1.756 (44.60) |
| -25 | -26 | 2.0000 (50.800) | 2.5000 - 12UN | 1.813 (46.05) | 2.381 (60.48) |

| Dash number (see note 5) | | $l_2$ inches (mm) ±.02 (0.5) | K inches (mm) +.015 -.005 | $K_1$ inches (mm) ±.020 (0.51) | $M_3$ inches (mm) ±.03 (0.8) | $M_4$ inches (mm) ±.03 (0.8) |
|---|---|---|---|---|---|---|
| Assembly | Body | | | | | |
| -1 | -2 | .83 (21.08) | .188 (4.78) | .094 (2.39) | .80 (20.3) | 1.33 (33.8) |
| -3 | -4 | .88 (22.35) | .234 (5.94) | .094 (2.39) | .92 (23.4) | 1.41 (35.8) |
| -5 | -6 | .94 (23.88) | .234 (5.94) | .094 (2.39) | .95 (24.1) | 1.52 (38.6) |
| -7 | -8 | .94 (23.88) | .250 (6.35) | .094 (2.39) | 1.05 (26.7) | 1.55 (39.4) |
| -9 | -10 | .98 (24.89) | .250 (6.35) | .094 (2.39) | 1.08 (27.4) | 1.70 (43.2) |
| -11 | -12 | 1.12 (28.45) | .305 (7.75) | .125 (3.18) | 1.33 (33.8) | 1.97 (50.0) |
| -13 | -14 | 1.27 (32.26) | .350 (8.89) | .125 (3.18) | 1.52 (38.6) | 2.27 (57.7) |
| -15 | -16 | 1.38 (35.05) | .350 (8.89) | .125 (3.18) | 1.64 (41.7) | 2.48 (63.0) |
| -17 | -18 | 1.38 (35.05) | .350 (8.89) | .125 (3.18) | 1.70 (43.2) | 2.55 (64.8) |
| -19 | -20 | 1.38 (35.05) | .415 (10.54) | .125 (3.18) | 1.73 (43.9) | 2.61 (66.3) |
| -21 | -22 | 1.38 (35.05) | .415 (10.54) | .125 (3.18) | 2.02 (51.3) | 2.89 (73.4) |
| -23 | -24 | 1.38 (35.05) | .485 (12.32) | .125 (3.18) | 2.20 (55.9) | 3.17 (80.5) |
| -25 | -26 | 1.58 (40.13) | .485 (12.32) | .125 (3.18) | 2.39 (60.7) | 3.77 (95.8) |

NOTES:
1. Dimensions are in inches.
2. Metric equivalents are given for information only.
3. Remove all burrs and slivers.
4. Dimensions and tolerances not shown shall be in accordance with SAE-J514.
5. Assemblies are only furnished to this specification (body, nut, and sleeve). Bodies are not to be stocked stored or issued.
6. The drawing is for identification purposes only and is not intended to restrict designs and shapes not dimensioned.

FIGURE 1. 90°Elbow, bulkhead - Continued.

REQUIREMENTS:

90° elbow, bulkhead shall be as specified on figure 1.

Materials shall be in accordance with MIL-DTL-18866.

Finish and finish designators shall be in accordance with MIL-DTL-18866.

Unless otherwise specified in MIL-DTL-18866, all plating's shall be capable of meeting 96-hour salt spray test in accordance with ASTM B117. The fittings shall show no evidence of red corrosion after 96 hours of salt spray. Fluid passages, other openings, and internal threads shall not be subject to the plating thickness requirement and may have bare areas provided they are protected with a light film of oil.

Maximum operating pressure. Maximum operating pressure shall be in accordance with SAE-J514.

PIN: The PIN consists of the letters "MS", the specification number, a dash, number for the bulkhead 90° elbow size, letter for material finish designator, and a letter for sleeve designator.

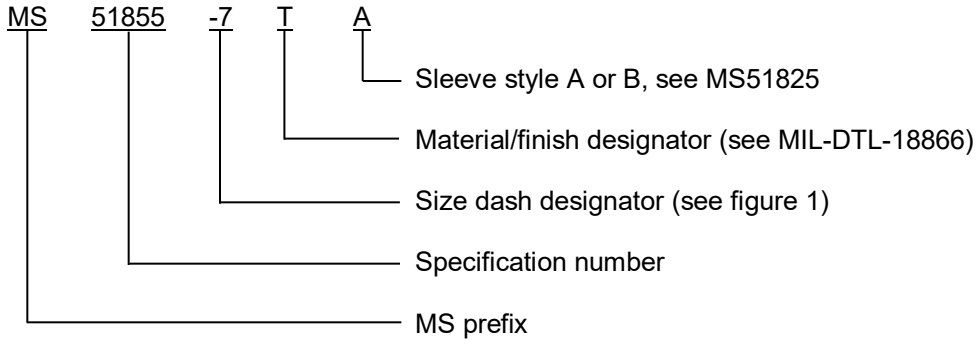


PIN example: MS51855-7TA indicates an 90º elbow, bulkhead, .3125 inch (7.938 mm) tube OD, Titanium anodized, sleeve style A.

Marking shall be in accordance with MIL-DTL-18866.

Class I and II ozone depleting substances (ODS) shall not be used in MS51855 or any referenced procedures.

Order of precedence. Unless otherwise noted herein or in the contract, in the event of a conflict between the text of this document and the references cited herein, the text of this document takes precedence. Nothing in this document, however, supersedes applicable laws and regulations unless a specific exemption has been obtained.

Referenced documents shall be of the issue in effect on date of invitations for bid.

Phosphate coating finish "P" has been replaced by "KA".

Material/finish designator SS has been replaced by S.

NOTE: The following restrictions do not apply to manufactures of the fittings and is applicable only to OEM's and users.

Zinc-plated materials should be avoided in hydraulic systems with water-glycol fluids. Reference ASTM MNL37 - Fuels and Lubricants Handbook, "water glycol fluids are highly alkaline due to the presence of amine based corrosion inhibitors. As a result, these fluids can attack zinc, cadmium, magnesium, and non-anodized aluminum, forming sticky or gummy residues. Consequently, these metals should be avoided when selecting system components.

Cadmium is not recommended. To the users of this document, it is recommended that the use of carbon steel material with cadmium plating be used only when other materials and finishes specified in this document cannot meet performance requirements.

Army and Marine ground forces zinc plating's. PIN codes FC, FD, Z, and ZC finishes have a chromate conversion coating which includes hexavalent chromium and are not recommended for Army and Marine ground systems. The use of coatings depositing hexavalent chromium for Army vehicles is prohibited unless otherwise explicitly stated in the contract as a requirement. For new designs PIN codes FC, FD, Z, and ZC are not to be supplied to Army and Marine ground forces. MIL-PRF-32647 Type KA is intended as a hazardous free plating material and is a direct replacement for zinc plating with a hexavalent chromium conversion coating. KA has an equivalent torque/tension as the plating's replaced.

Army and Marine ground vehicles. The use of cadmium plating for Army and Marine ground vehicles is prohibited unless otherwise explicitly stated in the contract as a requirement.

Army ground vehicle applications cadmium plating. Pin code J or KB may be substituted for cadmium ("Blank" PIN code) for Army ground vehicle applications. MIL-PRF-32647 Type KB is intended as a hazardous free plating material and is a direct replacement for cadmium plating ("Blank" PIN code). KB has an equivalent torque/tension as cadmium.

NAVSEA shipboard owned equipment. Cadmium is prohibited from use in NAVSEA-owned shipboard systems in accordance with the requirements of T9070-AL-DPC-020/077-2, unless otherwise approved by NAVSEA.

Changes from previous issue. Marginal notations are not used in this revision to identify changes with respect to the previous issue, due to the extent of the changes.

Referenced documents. In addition to MIL-DTL-18866, this document references the following:

| | |
|---|---|
| MIL-PRF-32647 | ASTM B117 |
| MS51823 | ASTM MNL37 |
| MS51825 | SAE-J514 |
| MS51860 | T9070-AL-DPC-020/077-2 |
| ASME B1.1 | |

CONCLUDING MATERIAL

Custodians:
Army - AR
Navy - OS
Air Force - 71
DLA - CC

Review activities:
Army - AT, GL. MI
Navy - AS

Preparing activity:
DLA - CC

(Project 4730-2021-006)

NOTE: The activities listed above were interested in this document as of the date of this document. Since organizations and responsibilities can change, you should verify the currency of the information above using the ASSIST Online database at https://assist.dla.mil.