INCH-POUND

MS51820G
30 March 2022
SUPERSEDING
MS51820F
w/AMENDMENT 1
26 April 2019

DETAIL SPECIFICATION SHEET

ELBOW, TUBE, 90 DEGREE, FLARELESS TYPE, HYDRAULIC

This specification is approved for use by all Departments and Agencies of the Department of Defense.

Reactivated after 3 April 2018 and may be used for new and existing designs and acquisitions.

The requirements for acquiring the product described herein shall consist of this specification sheet and MIL-DTL-18866.

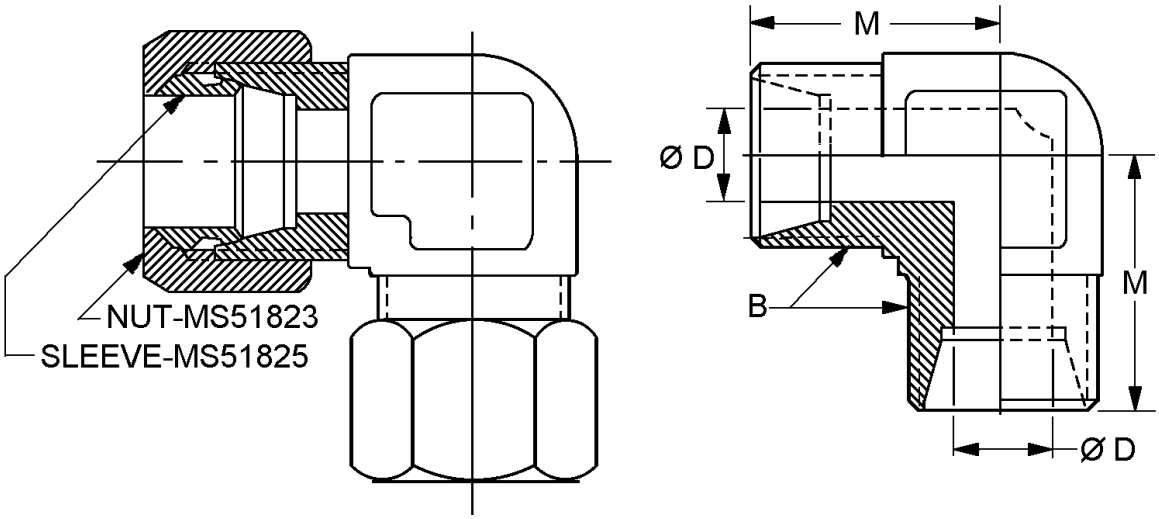

FIGURE 1. Elbow, tube 90°.

DISTRIBUTION STATEMENT A. Approved for public release; distribution is unlimited.

Dash number		Tube OD Nom inches (mm)	B (see note 7)	D diameter Drill	M inch (mm) ±.03 (0.8)
Assembly	Body (see note 5)				
-1	-21	.1250 (3.175)	.3125 - 24UNF	.093 (2.36)	.77 (19.56)
-2	-22	.1875 (4.763)	.3750 - 24UNF	.125 (3.18)	.83 (21.08)
-3	-23	.2500 (6.350)	.4375 - 20UNF	.203 (5.16)	.89 (22.61)
-4	-24	.3125 (7.936)	.5000 - 20UNF	.234 (5.94)	.95 (24.13)
-5	-25	.3750 (9.525)	.5625 - 18UNF	.281 (7.14)	1.05 (26.67)
-6	-26	.5000 (12.700)	.7500 - 16UNF	.422 (10.72)	1.25 (31.75)
-7	-27	.6250 (15.875)	.8750 - 14UNF	.500 (12.70)	1.42 (36.07)
-8	-28	.7500 (19.050)	1.0625 - 12UN	.656 (16.66)	1.58 (40.13)
-9	-29	.8750 (22.225)	1.1875 - 12UN	.718 (18.24)	1.66 (42.16)
-10	-30	1.0000 (25.400)	1.3125 - 12UN	.875 (22.23)	1.73 (43.94)
-11	-31	1.2500 (31.750)	1.6250 - 12UN	1.093 (27.76)	1.89 (48.01)
-12	-32	1.5000 (38.100)	1.8750 - 12UN	1.344 (34.14)	2.02 (51.31)
-13	-33	2.0000 (50.800)	2.5000 - 12UN	1.813 (46.05)	2.45 (62.23)

NOTES:
1. Dimensions are in inches.
2. Metric equivalents are given for information only.
3. Remove all burrs and slivers.
4. Dimensions and tolerances not shown shall be in accordance with SAE-J514.
5. Assemblies are only furnished to this specification (body, nut, and sleeve). Bodies are not to be stocked, stored, or issued.
6. The drawing is for identification purposes only and is not intended to restrict designs and shapes not dimensioned.
7. ASME B1.1 - Unified Inch Screw Threads (UN and UNR Thread Forms)

FIGURE 1. Elbow, tube 90° - Continued.

REQUIREMENTS:

Elbow, tube90° shall be as specified on figure 1.

Materials and finish designators shall be in accordance with MIL-DTL-18866.

Unless otherwise specified in MIL-DTL-18866, all platings shall be capable of meeting a minimum of 96 hours salt spray test in accordance with ASTM B117. The fittings shall show no evidence of red corrosion after 96 hours of salt spray. Fluid passages, other openings and internal threads shall not be subject to the plating thickness requirement and may have bare areas provided they are protected with a light film of oil.

Maximum operating pressure. Maximum operating pressure shall be in accordance with SAE-J514.

PIN: The PIN consists of the letters “MS”, the specification number, a dash, number for an elbow tube 90°assembly/body size, and a letter for material finish designator.

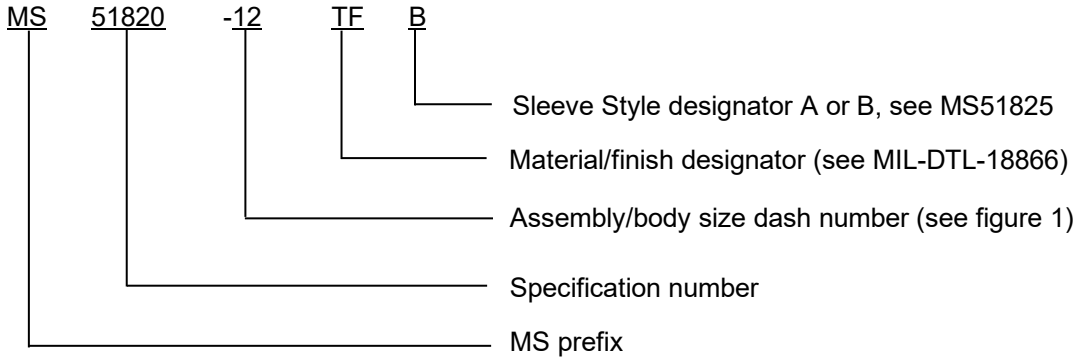

PIN example: MS51820-12TFB indicates an elbow, tube 90°, 1.500 inch (38.10 mm) tube OD, 1.8750 - 12UN straight thread, titanium with fluoride phosphate finish, and B style sleeve.

Marking shall be in accordance with MIL-DTL-18866.

Class I and II ozone depleting substances (ODS) shall not be used in MS51820 or any referenced procedures.

Tapered pipe thread connections are generally prohibited in high shock applications.

Order of precedence. Unless otherwise noted herein or in the contract, in the event of a conflict between the text of this document and the references cited herein, the text of this document takes precedence. Nothing in this document, however, supersedes applicable laws and regulations unless a specific exemption has been obtained.

Referenced documents shall be of the issue in effect on date of invitations for bid.

NOTE: The following restrictions do not apply to manufacturers of the fittings and is applicable only to OEM’s and users.

Cadmium is not recommended. To the users of this document, it is recommended that the use of carbon steel material with cadmium plating be used only when other materials and finishes specified in this document cannot meet performance requirements.

Army and Marine ground vehicle applications using zinc plating. PIN codes FC, FD, Z, and ZC finishes have a chromate conversion coating which includes hexavalent chromium and are not recommended for Army and Marine ground systems. The use of coatings depositing hexavalent chromium for Army vehicles is prohibited unless otherwise explicitly stated in the contract as a requirement. For new designs PIN codes FC, FD, Z, and ZC are not to be supplied to Army and Marine ground forces. PIN code KA (MIL- PRF- 32647 Type K20) is intended as a hazardous free plating material and is a direct replacement for zinc plating with a hexavalent chromium conversion coating. PIN code KA has equivalent torque/tension behavior as the zinc plating it replaces.

Army and Marine ground vehicles. The use of cadmium plating for Army and Marine ground vehicles is prohibited unless otherwise explicitly stated in the contract as a requirement.

Army and Marine ground vehicle applications using cadmium plating. Pin code J or KB may be substituted for cadmium ("Blank" PIN code) for Army ground vehicle applications. PIN code KB (MIL-PRF-32647 Type K16) is intended as a hazardous free plating material and is a direct replacement for cadmium plating ("Blank" PIN code). PIN code KB has an equivalent torque/tension behavior as the cadmium plating it replaces.

NAVSEA shipboard owned equipment. Cadmium is prohibited from use in NAVSEA-owned shipboard systems in accordance with the requirements of T9070-AL-DPC-020/077-2, unless otherwise approved by NAVSEA.

Table II provides a detail reference data listing for MS39207 to MS51820. This table contains coordination of equivalent tube sizes, in both compression and hydraulic type elbows. Assembly replacement is authorized.

TABLE II. Assembly equivalency (for information only).

Compression MS39207	Hydraulic MS51820	Compression MS39207	Hydraulic MS51820
-1	-1	-8	-5
-2	-2	-9	-6
-3	-3	-10	-7
-4	-4	-11	-8
-5	-5	-12	-12
-6	-6	-13	-13
-7	-7		

Changes from previous issue. Marginal notations are not used in this revision to identify changes with respect to the previous issue, due to the extent of the changes.

Referenced documents. In addition to MIL-DTL-18866, this document references the following:

MIL-PRF-32647	ASME B1.1
MS39207	ASTM B117
MS51823	SAE-J514
MS51825	T9070-AL-DPC-020/077-2

CONCLUDING MATERIAL

Custodians:
Army - AT
Navy - SH
Air Force - 71
DLA - CC

Review activities:
Army - AR, MI
Navy - AS, CG, SA

Preparing activity:
DLA - CC

(Project 4730-2022-012)

NOTE: The activities listed above were interested in this document as of the date of this document. Since organizations and responsibilities can change, you should verify the currency of the information above using the ASSIST Online database at https://assist.dla.mil.