INCH-POUND

MS51517D
3 September 2020
SUPERSEDING
MS51517C
15 November 2017

DETAIL SPECIFICATION SHEET

FITTINGS, HYDRAULIC TUBE, FLARED 37 DEGREE, CROSS

This specification is approved for use by all Departments and Agencies of the Department of Defense.

The requirements for acquiring the product described herein shall consist of this specification sheet and MIL-DTL-18866.

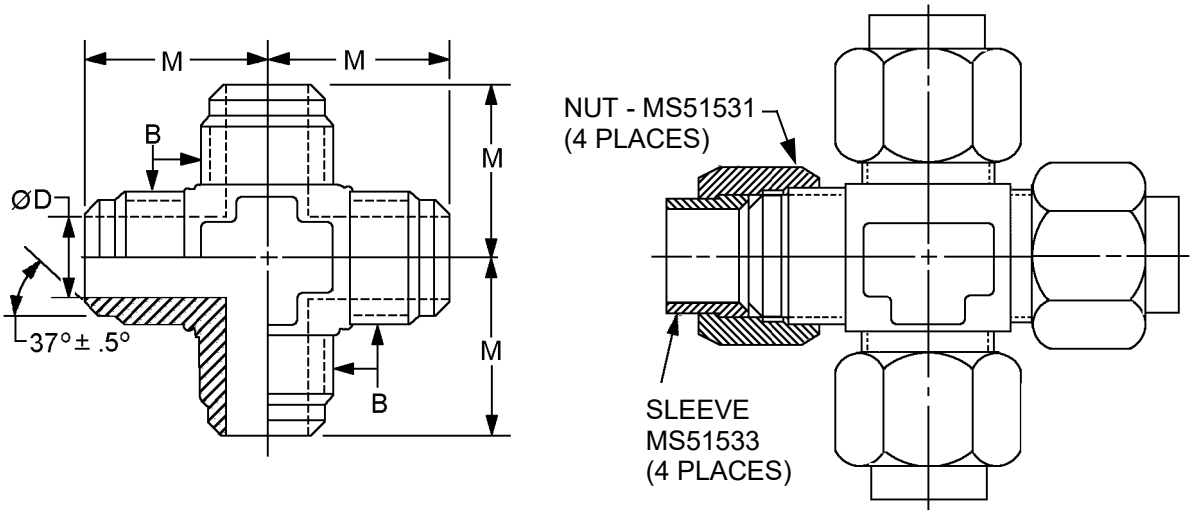

See notes at end of figure.

FIGURE 1. Cross tube.

Suffix designator (see note 4)		Tube OD nom.	B Straight thread ASME B1.1	D diameter	
Assembly	Body			Basic inches (mm)	Tolerance inches (mm)
A2	B2	.1250 (3.175)	.3125-24 UNF-2A	.062 (1.57)	±.004 (0.10)
A3	B3	.1875 (4.763)	.3750-24 UNF-2A	.125 (3.18)	
A4	B4	.2500 (6.350)	.4375-20 UNF-2A	.172 (4.37)	
A5	B5	.3125 (7.936)	.5000-20 UNF-2A	.234 (5.94)	
A6	B6	.3750 (9.525)	.5625-18 UNF-2A	.297 (7.54)	±.008 (0.20)
A8	B8	.5000 (12.700)	.7500-16 UNF-2A	.391 (9.93)	
A10	B10	.6250 (15.875)	.8750-14 UNF-2A	.484 (12.29)	
A12	B12	.7500 (19.050)	1.0625-12 UN-2A	.609 (15.47)	
A14	B14	.8750 (22.225)	1.1875-12 UN-2A	.719 (18.26)	
A16	B16	1.0000 (25.400)	1.3125-12 UN-2A	.844 (21.44)	
A20	B20	1.2500 (31.750)	1.6250-12 UN-2A	1.078 (27.38)	
A24	B24	1.5000 (38.100)	1.8750-12 UN-2A	1.312 (33.32)	±.012 (0.30)
A32	B32	2.0000 (50.800)	2.500-12 UN-2A	1.781 (45.24)	

Suffix designator (see note 4)		M inches (mm) ±.030 (0.76)
Assembly	Body	
A2	B2	.770 (19.56)
A3	B3	.830 (21.08)
A4	B4	.890 (22.61)
A5	B5	.950 (24.13)
A6	B6	1.060 (26.92)
A8	B8	1.250 (31.75)
A10	B10	1.450 (36.83)
A12	B12	1.660 (42.16)
A14	B14	1.730 (43.94)
A16	B16	1.810 (45.97)
A20	B20	2.060 (52.32)
A24	B24	2.330 (59.18)
A32	B32	3.060 (77.72)

NOTES:
1. Dimensions are in inches.
2. Metric equivalents are given for information only.
3. Break all sharp edges; remove all burrs and slivers.
4. Assemblies are only furnished to this specification (body, nuts, and sleeves). Bodies are not to be stocked, stored, or issued.
5. Dimensions and tolerances not shown shall be in accordance with SAE-J514 for 37° flared fittings.
6. The drawing is for identification purposes only and is not intended to restrict designs and shapes not dimensioned.

FIGURE 1. Cross tube - Continued.

REQUIREMENTS:

Cross tube shall be as specified on figure 1.

Components of the assemblies shall be of the same material and finish.

Materials shall be in accordance with MIL-DTL-18866.

Finish and finish designators shall be in accordance with MIL-DTL-18866.

Unless otherwise specified in MIL-DTL-18866, all plating's shall be capable of meeting 96-hour salt spray test in accordance with ASTM B117. The fittings shall show no evidence of red corrosion after 96 hours of salt spray. Fluid passages, other openings, and internal threads shall not be subject to the plating thickness requirement and may have bare areas provided they are protected with a light film of oil.

Maximum operating pressure. Maximum operating pressure shall be in accordance with SAE-J514.

PIN: The PIN consists of the letters "MS", the specification number, a letter and number for cross tube size, and a letter for material finish designator.

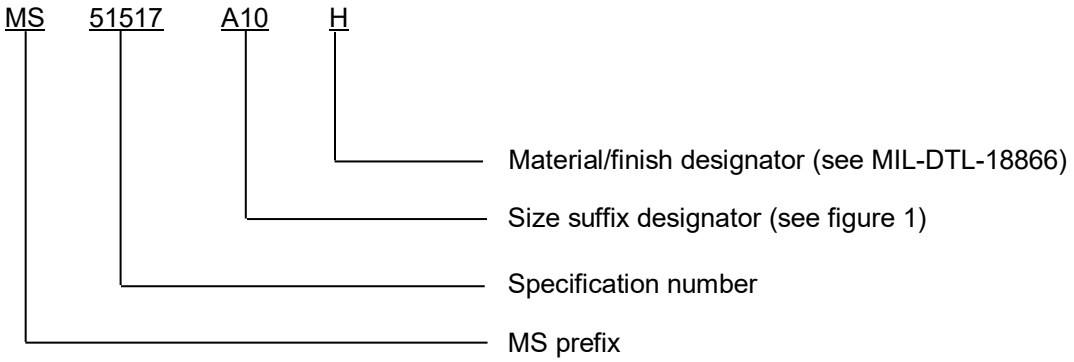

PIN example: MS51517A10H indicates a cross tube, .6250 inch (15.875 mm), steel with zinc-aluminum plating.

Marking shall be in accordance with MIL-DTL-18866.

Class I and II ozone depleting substances (ODS) shall not be used in MS51500 or any referenced procedures.

Order of precedence. Unless otherwise noted herein or in the contract, in the event of a conflict between the text of this document and the references cited herein, the text of this document takes precedence. Nothing in this document, however, supersedes applicable laws and regulations unless a specific exemption has been obtained.

Referenced documents shall be of the issue in effect on date of invitations for bid.

Phosphate coating finish "P" has been replaced by "KA".

NOTE: The following restrictions do not apply to manufactures of the fittings and is applicable only to OEM's and users.

Cadmium is not recommended. To the users of this document, it is recommended that the use of carbon steel material with cadmium plating be used only when other materials and finishes specified in this document cannot meet performance requirements.

Army and Marine ground forces zinc plating's. PIN codes FC, FD, Z, and ZC finishes have a chromate conversion coating which includes hexavalent chromium and are not recommended for Army and Marine ground systems. The use of coatings depositing hexavalent chromium for Army vehicles is prohibited unless otherwise explicitly stated in the contract as a requirement. For new designs PIN codes FC, FD, Z, and ZC are not to be supplied to Army and Marine ground forces.
MIL-PRF-32647 Type KA is intended as a hazardous free plating material and is a direct replacement for zinc plating with a hexavalent chromium conversion coating. KA has an equivalent torque/tension as the plating's replaced.

Army and Marine ground vehicles. The use of cadmium plating for Army and Marine ground vehicles is prohibited unless otherwise explicitly stated in the contract as a requirement.

Army ground vehicle applications cadmium plating. Pin code J or KB may be substituted for cadmium ("Blank" PIN code) for Army ground vehicle applications. MIL-PRF-32647 Type KB is intended as a hazardous free plating material and is a direct replacement for cadmium plating ("Blank" PIN code). KB has an equivalent torque/tension as cadmium.

NAVSEA shipboard owned equipment. Cadmium is prohibited from use in NAVSEA-owned shipboard systems in accordance with the requirements of T9070-AL-DPC-020/077-2, unless otherwise approved by NAVSEA.

Changes from previous issue. Marginal notations are not used in this revision to identify changes with respect to the previous issue, due to the extent of the changes.

Referenced documents. In addition to MIL-DTL-18866, this document references the following:

MIL-PRF-32647	ASTM B117
MS51531	SAE-J514
MS51533	T9070-AL-DPC-020/077-2
ASME B1.1	

CONCLUDING MATERIAL

Custodians:
Army - AR
Navy - SH
Air Force - 71
DLA - CC

Review activities:
Army - AT, MI
Navy - CG, MC, SA

Preparing activity:
DLA - CC

(Project 4730-2020-083)

NOTE: The activities listed above were interested in this document as of the date of this document. Since organizations and responsibilities can change, you should verify the currency of the information above using the ASSIST Online database at https://assist.dla.mil.