INCH-POUND

MIL-DTL-13777L
w/Amendment 4
19 August 2024
SUPERSEDING
MIL-DTL-13777L
w/Amendment 3
21 July 2022

DETAIL SPECIFICATION

CABLE, SPECIAL PURPOSE, ELECTRICAL, GENERAL SPECIFICATION FOR

Inactive for new design after 1 June 1998.

This specification is approved for use by all Departments
and Agencies of the Department of Defense.

1. SCOPE

1.1 Scope. This specification covers flexible, portable multi-conductor cables for interconnecting various units of complex weapons systems where voltages do not exceed 600 V_{rms} (see 6.1).

1.2 Classification.

1.2.1 Part or Identifying Number (PIN). The PIN consists of the following:

M13777/1-	S	16	1375	S	C
Specification sheet number (1.2.1.1)	Cable shield (1.2.1.2)	Number of conductors (1.2.1.3)	Nominal cable diameter (1.2.1.4)	Conductor shield (1.2.1.5)	Coaxial conductor (see 1.2.1.6)

See table XI for valid PIN numbers.

1.2.1.1 Specification sheet number. The specification sheet number designation consists of the prefix M, followed by the basic specification number, a slash, the specification sheet number, and a dash.

1.2.1.2 Cable shield. When the letter S precedes the number of conductors, an overall shield under the sheath is indicated.

1.2.1.3 Number of conductors. The first two digits denote the number of individual conductors comprising the cable.

1.2.1.4 Nominal cable diameter. The following four digits denote the nominal cable diameter in mils (thousandths of an inch).

1.2.1.5 Conductor shield. When the letter S follows the digits, individual conductor shields are indicated.

Comments, suggestions, or questions on this document should be addressed to DLA Land and Maritime, ATTN: VAI, P.O. Box 3990, Columbus, Ohio 43218-3990, or email to WireCable@dla.mil. Since contact information can change, you may want to verify the currency of this address information using the ASSIST Online database at https://assist.dla.mil.

AMSC N/A FSC 6145

DISTRIBUTION STATEMENT A. Approved for public release; distribution is unlimited.

1.2.1.6 Coaxial conductor. The letter C at the end of the type designation denotes that the cable contains one or more coaxial conductors.

2. APPLICABLE DOCUMENTS

2.1 General. The documents listed in this section are specified in sections 3 and 4 of this specification. This section does not include documents cited in other sections of this specification or recommended for additional information or as examples. While every effort has been made to ensure the completeness of this list, document users are cautioned that they must meet all specified requirements documents cited in sections 3 and 4 of this specification, whether or not they are listed.

2.2 Government documents.

2.2.1 Specifications, standards, and handbooks. The following specifications, standards, and handbooks form a part of this document to the extent specified herein. Unless otherwise specified, the issues of these documents are those cited in the solicitation or contract.

FEDERAL SPECIFICATION

L-P-390	-	Plastic, Molding and Extrusion Material, Polyethylene and Copolymers (Low, Medium and High Density)

FEDERAL STANDARDS

FED-STD-228	-	Test Methods for Cables and Wire, Insulated

COMMERCIAL ITEM DESCRIPTION

A-A-59551	-	Wire, Electrical, Copper (Uninsulated)

DEPARTMENT OF DEFENSE SPECIFICATIONS

MIL-DTL-17	-	Cables, Radio Frequency, Flexible and Semi rigid, General Specification For
MIL-I-631	-	Insulation, Electrical, Synthetic-Resin Composition, Nonrigid

(See Assist database for list of specification sheets.)

DEPARTMENT OF DEFENSE STANDARDS

MIL-STD-104	-	Limits for Electrical Insulation Colors
MIL-STD-810	-	Environmental Engineering Considerations and Laboratory Tests
MIL-STD-2223	-	Test Methods for Insulated Electric Wire

(Copies of these documents are available online at https://quicksearch.dla.mil/.)

2.3 Non-Government publications. The following documents form a part of this document to the extent specified herein. Unless otherwise specified, the issues of these documents are those cited in the solicitation or contract.

ASTM INTERNATIONAL

ASTM A313/A313M	-	Standard Specification for Stainless Steel Spring Wire
ASTM D412	-	Standard Test Methods for Vulcanized Rubber and Thermoplastic Elastomers — Tension
ASTM D1149	-	Standard Test Methods for Rubber Deterioration—Cracking in an Ozone Controlled Environment
ASTM D4066	-	Nylon Injection and Extrusion Materials (PA), Standard Classification System for

(Copies of these documents are available online at https://www.astm.org.)

ISO International Standards

ISO/IEC 17025	-	General requirements for the competence of testing and calibration laboratories

(Copies of these documents are available online https://www.iso.org.)

2.4 Order of precedence. Unless otherwise noted herein or in the contract, in the event of a conflict between the text of this document and the references cited herein (except for related specification sheets), the text of this document takes precedence. Nothing in this document, however, supersedes applicable laws and regulations unless a specific exemption has been obtained.

3. REQUIREMENTS

3.1 Specification sheets. The individual item requirements shall be as specified herein and in accordance with the applicable specification sheet. In the event of any conflict between the requirements of this specification and the specification sheet, the latter shall govern.

3.2 Recycled, recovered, or environmentally preferable or biobased materials. Recycled, recovered, environmentally preferable, or biobased materials should be used to the maximum extent possible, provided that the material meets or exceeds the operational and maintenance requirements, and promotes economically advantageous life cycle costs.

3.3 First article. When specified (see 6.2.1), a sample shall be subjected to first article inspection in accordance with 4.4.

3.4. Materials. The material shall be as specified and when not specifically described, shall meet the performance characteristics specified herein.

3.5 Wire. Each wire shall consist of a conductor covered with insulating material, insulation jackets and shields as required.

3.5.1 Conductor. Each conductor shall be composed of an assembly of coated copper strands, and when specifically required, reinforcing steel strands (see 3.5.1.2). Conductor sizes 20 AWG through 12 AWG shall be constructed with concentric lay conductors and shall comply with the requirements listed in table I. Concentric lay shall be interpreted to be a central core surrounded by one or more layers of helically wound strands. The direction of lay for the successive layers shall be alternately reversed (true concentric lay) or in the same direction (unidirectional lay). If the direction of lay for the successive layers is the same, the pitch or length of lay shall increase with each successive layer.

TABLE I. Conductor construction and maximum resistance values.

Conductor AWG size	Conductor construction copper strands		Maximum conductor resistance (Ohms per 1000 feet)
	Number	Size (AWG)	Tin Coated
0000	427	23	.0562
000	259	22	.0718
00	259	23	.0896
0	259	24	0.113
1	259	25	0.143
2	259	26	0.180
4	133	25	0.283
5	133	26	0.358
6	133	27	0.450
8	133	29	0.710
9	133	30	0.914
10	104	30	1.25
12	19	25	1.99
13	19	26	2.43
14	19	27	3.05
15	19	28	3.88
16	19	29	4.82
18	16+3SS	30	7.38
20	16+3SS	32	11.60

3.5.1.1 Copper strands. The copper strands shall be soft annealed, commercially pure copper, free from splints, flaws, or other imperfections. Each strand shall be drawn and annealed so that strands taken from the completed cable conform to the values given below. Tests shall be in accordance with 4.8.1.1.

Elongation (in 10 inches) Minimum %
10

3.5.1.2 Conductor reinforcement. Insulated conductors of 18 size and smaller as specified shall be reinforced by the addition of 3 steel strands (SS), spring temper, stainless steel wire meeting the requirements of ASTM A313/A313M in accordance with table I and in the applicable specification sheet. Stainless steel strands shall be the same size as the copper stranding and shall be positioned at the center core or in the core and the first grouping surrounding the center core.

3.5.1.3 Coating. Copper strands shall be tin coated unless otherwise specified. Steel strands shall be coated. Conductors shall be tested for coating in accordance with 4.8.1.2. Coaxial member strands shall be coated as specified in MIL-DTL-17 or in the applicable specification sheet.

3.5.1.4 Conductor resistance. The resistance in ohms per 1000 feet at 68 ºF for tin coated conductors shall not exceed the values listed in table I when tested in accordance with 4.8.1.3.

3.5.1.5 Joints. There shall be no slices or joints in the conductor as a whole. Not more than one of the strands in a concentric conductor of 19 strands or less shall be spliced in any one linear foot of the conductor. In rope stranded conductors the primary groups used in forming the rope shall be considered the equivalent of a solid strand in concentric stranded conductors. In the case of bunch stranded conductors, a group of individual strands not exceeding 10 percent of the total number of strands comprising the conductor may be considered as a primary group. Such a group may be treated on the same basis as set forth for the primary group of a rope stranded conductor. In all cases, splices or joints shall be so constructed and distributed throughout the conductor that its diameter and resistance will not be adversely affected and its performance in finished cable shall insure compliance with requirements specified herein.

3.5.2 Insulation compound. There shall be applied over the conductor a well centered virgin polyethylene material in accordance with L-P-390, type II, class L, grade 3 or 4 and meeting the requirements in table II when tested in accordance with 4.8.2.1.

3.5.2.1 Accelerated aging. When tested in accordance with 4.8.2.2, the insulation compound shall meet the properties in table II.

TABLE II. Accelerated aging properties.

Property	
Ultimate elongation (min) inches	2-7
Tensile strength (min) psi	1400
After aging	
Depreciation in tensile strength (%) max.	25
Depreciation in elongation (%) max	25

3.5.2.2 Shrinkage. The shrink back of the insulation form either ends of the conductor shall not exceed 0.0625 inch (1.59 mm) and there shall be no evidence of end splitting or cracking when tested in accordance with 4.8.2.2.2.

3.5.3 Electrical properties.

3.5.3.1 Electrode spark test. At the option of the manufacturer, the conductors shall be subjected to the spark test of 4.8.2.4.1 to assure that cracks, pinholes and similar defects do not exist in the insulation. The spark test voltages shall be as specified in the applicable specification sheet.

3.5.3.2 Voltage breakdown (primary insulation). Prior to final cabling, 100 percent of all insulated conductors shall show no evidence of breakdown when tested in accordance with 4.8.2.5.1.1 at the minimum tank test voltages specified in table III. At the option of the manufacturer, the impulse dielectric test of 4.8.2.5.1.2 may be substituted for the tank test at the minimum impulse dielectric test voltages specified below without evidence of breakdown.

TABLE III. Minimum tank test voltages.

AWG size	1 minute tank test voltage	Impulse dielectric test voltage (kilovolts peak)
20-10	2000	10.0 kVp
8-2	3000	12.5 kVp
1-4/0	4000	15.0 kVp

3.5.3.3 Water absorption. The increase in capacitance of the insulation compound together with the nylon covering on all sizes 12 AWG and smaller shall not exceed 3 percent when tested in accordance with 4.8.2.5.1.3. The total capacitance reading on insulated conductors 18 AWG and smaller shall not exceed 110 pF per foot at the completion of the 8-day test.

3.5.3.4 Coaxial members.

3.5.3.4.1 Capacitance. The capacitance of coaxial conductors shall be as specified in the applicable specification sheet when cables are tested in accordance with 4.8.2.5.2.

3.5.3.4.2 Attenuation. The maximum attenuation of coaxial conductors shall be as specified in the applicable specification sheet when cables are tested in accordance with 4.8.2.5.3.

3.5.3.4.3 Impedance. The impedance of coaxial conductors shall be as specified in the applicable specification sheet when cables are tested in accordance with 4.8.2.5.4.

3.5.4 Polyamide covering. An extruded, clear, heat stabilized polyamide jacket with a minimum 0.003 inch (.08 mm) average wall thickness shall be extruded over all sizes 12 AWG and smaller. Polyamide shall be in accordance with ASTM D4066, composition A, type III, low water absorption, class E and shall conform to the heat stability test of 4.8.2.3.1 without evidence of cracks or tears. Sizes 10 AWG and larger shall require no covering.

3.5.5 Color code. Each insulated conductor shall be color coded in accordance with the applicable specification sheet. The insulation shall be the base color. When specifically specified, all white color coding may be used or natural colored insulation material with stripes (see 6.2). Limits for colored insulation shall be in accordance with MIL-STD-104.

3.5.5.1 Color coding of polyamide covering. Where extruded polyamide coverings are used, color identification shall be by means of helical stripes applied in the same direction over the polyamide. All materials used for striping shall be nonconductive. When the insulating compound is colored for the base color, two colored traces shall be used when applicable with the wider stripe indicating the first tracer. When natural color insulation is used as the insulation compound, the base color shall be indicated by an added base stripe (see 3.5.5.2).

3.5.5.1.1 Surface resistance. The surface resistance of the covered insulated black striped conductors shall be 10 megohm-inches (min) initial and final values when tested in accordance with 4.8.2.4.2.

3.5.5.2 Stripe width. The width of the base color stripe (when applicable) shall not be less than 0.045 inch (1.14 mm). The first tracer shall not be less than 0.031 inch (.79 mm) and the second tracer if required shall not be less than 0.015 inch (.38 mm). All dimensions are perpendicular to the axis of the stripe.

3.5.5.3 Length of lay. The length of lay of the colored stripes shall conform to the following:

Diameter of covering (in.)	000 to 0.083	0.084 to .110	.111 and larger
Length of lay max. (in.)	1.00	1.500	2.000

3.5.5.4 Durability. Striping applied to the outer surface shall be capable of withstanding 250 cycles (500 strokes) of abrasive action when tested in accordance with 4.8.2.4.1. A continuous line of the colored stripe shall not be removed.

3.5.6 Conductor shield. When the construction includes a shield, a tight-fitting, closely woven braid of tin coated soft or drawn and annealed copper strands shall be applied over the jacket. The shield shall be applied in such a manner as to provide at least 75 percent coverage over the construction beneath. The braid shall consist of 36 AWG for diameters 0.250 inch (6.35 mm) or less and 34 AWG for larger sizes. Shields shall be applied in such a manner as to preclude irregularities, breaks or other discontinuities not consistent with good manufacturing practice. The percent coverage of the shield shall be computed as follows:

$$K = (2F - F^2) \times 100$$

$$F = NPd/\sin a$$
$$a = \tan^{-1} (2\pi(D + 2d) P/C)$$

Where:

F = Fill or space factor
K = Percent coverage
N = Number of strands per carrier
P = Picks per inch of wire length
d = Diameter of individual shield strands in inches
a = Angle of braid with axis of cable
D = Diameter of wire under the shield in inches
C = Number of carriers

3.5.6.1 Shielded jackets. Over shielded single conductors, pairs, triplets or quads, there shall be applied either a polyamide jacket 0.005 inch (.13 mm) to 0.008 inch (.20 mm) wall thickness of white or natural coloring or a sealed jacket of polyester tapes. Polyamide jackets may be used when the diameter over the shield does not exceed 0.200 inches (5.08 mm). Sealed tapes may be used on shields for any diameter. Sealed jackets of polyester tapes made with adhesive coated polyester tapes or an adhesive applied between two 0.001 inch (.03 mm) helically applied polyester tapes or polyester/polyethylene tapers consisting of 0.001 inch (.03 mm) polyester and a 0.0005 inch (.01 mm) polyethylene. Two tapes shall be applied with a 50 percent minimum overlap. All shielded polyamide jackets shall show no evidence of cracks or tears when subjected to the heat stability test of 4.8.2.3. Where insulation is a requirement (electrically driven shields) the sealed polyester tape jacket shall be tested at 1500 volts prior to cabling in accordance with 4.8.2.5.2 with no evidence of breakdown. The polyester film shall conform to MIL-I-631, type G, form F, except for percent elongation.

3.6 Cabling. The requisite number of conductors, as required in the applicable specification sheet, shall be cabled together with suitable lay and filler where necessary, producing an essentially circular cross section.

3.6.1 Filler. Filler material shall be one of the following materials and shall be capable of conforming to all of the performance requirements specified for the completed cable. Clean, dry, long fiber cotton, fungus treated to conform to the test specified in 4.7.1; twisted polyethylene film conforming to L-P-390, type I, grade 2 or 3; oriented polyethylene multi-monofilament; or polyamide fiber filler. Where found fillers such as cores or wire replacements are required, polyethylene rod filament conforming to L-P-390, type II, grade 7 may be used.

3.6.2 Tape marker. The tape marker shall be at least .125 inch (3.18 mm) wide with marking 1 foot apart and shall be placed under the cable separator. The year of manufacture and the name of the manufacturer shall be clearly printed on some side of the tape between foot markings. The markings shall be clearly visible upon removal of the tape from the cable. Other information may be included at the manufacturer's option.

3.6.3 Barrier tape. At the option of the manufacturer, a barrier tape may be applied over the assembled wires under the cable separator. Tape material shall be polyethylene terephthalate conforming to MIL-I-631, type G.

3.6.4 Cable shield. When specified in the applicable specification sheet, there shall be applied over the assembled wires under the cable separator, a braid consisting of tin coated copper strands having construction and coverage conforming to 3.5.6 and wire gage sizes as listed below:

Core diameter	Shield braid sizes (AWG)
0 -.300 inch	36
.301 - 0.900 inch	34
0.901 - 1.700 inch	32
1.701 and up	30

When cable shield is required, a minimum 0.001 inch (.03 mm) core tape conforming to 3.6.3 shall be applied over the shield and over the assembled core under the shield and over the cable shield under the cable separator.

3.6.5 Cable separator. The separator shall be applied over the assembled conductors or the overall shield if required. The separator shall consist of dry, soft, cotton braid, fungus treated and conforming to the test specified in 4.7.1. The size of the cotton shall be 26/2 and the percent coverage shall not be less than 80 percent when computed by the following formula:

$$K = (2F - F^2) \times 100$$
$$F = NPd/\text{Sin } a$$
$$a = \text{Tan}^{-1} (2\pi(D + 2d) P/C)$$

Where:

F = Fill or space factor
K = Percent coverage
N = Number of strands per carrier
P = Picks per inch of wire length

d = Diameter of individual shield strands in inches
a = Angle of braid with axis of cable
D = Diameter of wire under the shield in inches
C = Number of carriers

3.7 Sheath. Over the cable core, there shall be extruded a well centered sheath. The minimum thickness at any cross section shall be not less than 90 percent of the average wall thickness at the cross section. The minimum sheath thickness shall not be less than that specified in the applicable specification sheet. When two layers are specified, the outer layer shall constitute at least 50 percent of the total thickness.

3.7.1 Reinforcement. Where two layers are specified in the applicable specification sheet, a reinforcement shall be provided between the two layers consisting of two serves of 16-2/3 fungus resistant cabled cotton, served in reverse, 7 ends per inch of cable, or equivalent rayon or polyamide tire core may be substituted for the seine twine serves.

3.7.2 Physical properties.

3.7.2.1 Unaged sheath. Single and double layer sheaths shall consist of a polychloroprene compound (virgin material) having the characteristics listed in table IV.

TABLE IV. Physical characteristics for unaged sheath.

Property	Value
Tear strength (lb/in.), min.	20
Tension set (inch), max	.375
Ultimate elongation (2 inches to break), minimum	2-8
Tensile strength (psi), minimum	1800

3.7.2.2 Accelerated aging. When treated in accordance with 4.8.2.2, the sheath shall meet the requirements in table V.

TABLE V. Accelerated aging sheath requirements.

Property	Value
Ultimate elongation (2 inch to break), minimum	2-7
Tensile strength (psi), minimum	1600

3.7.2.3 Resistance to oil. When tested in accordance with 4.8.3.1.6, the tensile strength and the ultimate elongation of the sheath shall not depreciate more than 40%.

3.7.3 Vulcanizing. In order that the surface of the finished cable shall present a smooth appearance, without objectionable roughness or irregularities, the sheath shall be vulcanized and cured in place over the cable core while contained in and restricted by a close fitting mold (see 6.5.1) or continuous lead pipe extruded directly onto the cable. After vulcanizing, the sheath shall be a firmly bound, strong, high elastic, homogenous mass. The sheath shall not be over-vulcanized, sticky, or tacky and shall only with extreme difficulty be separable into layers.

3.7.4 Cable identification. The following cable identification shall be marked on the outer surface of the sheath:

PIN (see 1.2.1), Manufacturer's name, and year of manufacture.

Inked marking shall be employed. Inked marking shall repeat at intervals of not more than 23 inches (584.20 mm) and may be continuous. Marking, at the discretion of the manufacturer, may be on either one, two or three lines. When requested by the procuring activity, the conductor size shall be included in the identification inscription (see 6.2).

3.7.5 Durability (ink marking). The ink marking on the sheath shall meet the durability requirements of 3.5.5.4 except that a continuous line shall not be evident through any letter or numeral.

3.8 Finished cable.

3.8.1 Cold bend. All cable shall be capable of withstanding the test voltage specified in the applicable specification sheet and there shall be no visible signs of damage when examined under a glass having a magnification of three diameters after cold bending in accordance with 4.8.4.1.2.

3.8.1.1 Cold bend torque. The amount of torque required to bend the cable shall not exceed that specified in the applicable specification sheet when tested in accordance with 4.8.4.1.3.

3.8.2 Impact, bend and twist requirements. Unless otherwise specified in the applicable specification sheet, finished cable shall comply with the following minimum impact, bend and twist requirements (mechanical tests).

Mechanical testing (minimum cycles)

Impact-200
Bend-2000
Twist-2000

The cable shall meet the mechanical tests at -65 ºF to 160 ºF in accordance with 4.8.4.1.1 (see table VI) or at 68 ºF to 95 ºF in accordance with 4.8.4.1 (see table VIII) whichever is applicable. There shall be no electrical breakdown or cracking or splitting of the outer sheath during the testing. Specimens used for this test should be discarded without further testing. Cables 1.756 inches in diameter and larger shall be excluded from the bend and twist tests.

3.8.2.1 Voltage test requirements. When tested in accordance with 4.8.4.2.2, the cable shall exhibit no breakdown when subjected to the test voltage specified in the applicable specification sheet at a frequency of 60 or 400Hz.

3.8.2.2 Insulation resistance. After application of the sheath, the insulation of the completed cable shall have a resistance value of no less than the values of R as calculated from the following formula:

$$R = 50{,}000 \log D/d$$

Where D = Diameter over insulation
d = Diameter under insulation
R = Insulation resistance in megohms – 1000ft at 60 ºF

3.8.3 Size and weight. The size and weight (if applicable) of the finished cable shall be in accordance with that specified in the applicable specification sheet.

3.8.4 Ozone resistance. After testing in accordance with 4.8.4.1.4, the sheath shall exhibit no visible cracks when examined under a glass having a magnification of three diameters.

3.9 Workmanship. Cable furnished under this specification shall be manufactured in a thoroughly workmanlike manner. All material shall be sound, of uniform quality and condition, and free of cracks and other defects which may adversely affect its serviceability.

4. VERIFICATION

4.1 Classification of inspections. The inspection requirements specified herein are classified as follows:

a. First article inspection (see 4.4).

b. Conformance inspection (see 4.6).

4.2 Test equipment and inspection facilities. Test equipment shall be of accuracy appropriate to the tolerances for requirements specified herein and the applicable specification sheet. Test and measuring equipment and inspection facilities having sufficient accuracy, quality and quantity to permit performance of the required inspection shall be established and maintained by the contractor. The establishment and maintenance of a calibration system to control the accuracy of the measuring and test equipment shall be in accordance with ISO/IEC 17025.

4.3 Inspection conditions. Unless otherwise specified herein, all examinations and tests shall be performed at 68 ºF to 95 ºF at barometric pressure of 28 to 31 inches of mercury, and at a relative humidity of 80%, maximum.

4.4 First article inspection. First article inspection shall be specified in table VI and shall be performed at a laboratory acceptable to the Government (see 6.2.1).

4.5 Sampling. The sample submitted for first article approval by the manufacturer shall be representative of the material which would normally be fabricated under his production methods and as specified in the appendix of this specification (see Appendix A).

TABLE VI. First article tests.

Test	Requirement paragraph	Test paragraph
Conductor		
Coating	3.5.1.3	4.8.1.2
Conductor resistance	3.5.1.4	4.8.1.3
Elongation of copper strands	3.5.1.1	4.8.1.1
Tensile strength, steel strands	3.5.1.2	4.8.1.1
Insulation		
Ultimate elongation	table II	4.8.2.1.1
Tensile strength	table II	4.8.2.1.2
Accelerated aging	3.5.2.1	4.8.2.2
Water absorption	3.5.3.3	4.8.2.5.1.3
Heat stability	3.5.4	4.8.2.3
Shrinkage	3.5.2.2	4.8.2.2.2
Coding material		
Stripe durability	3.5.5.4	4.8.2.4
Stripe conductivity	3.5.5.1.1	4.8.2.4.2
Sheath		
Tension set	table IV	4.8.3.1.1
Ultimate elongation	table V	4.8.3.1.2
Tensile strength	table V	4.8.3.1.3
Accelerated aging	3.7.2.2	4.8.2.2
Oil resistance	3.7.2.3	4.8.3.1.6
Marking durability	3.7.5	4.8.2.4.1
Cable		
Impact	3.8.2	4.8.4.1.1
Bend	3.8.2	4.8.4.1.1
Twist	3.8.2	4.8.4.1.1
Weight	3.8.3	4.7
Voltage test	3.8.2.1	4.8.4.2.2
Insulation resistance	3.8.2.2	4.8.4.2.3
Cold bend torque test	3.8.1.1	4.8.4.1.2
Ozone resistance	3.8.4	4.8.4.1.4
Attenuation	3.5.3.4.2	4.8.2.5.3
Impedance	3.5.3.4.3	4.8.2.5.4

4.6 Conformance inspection. Conformance inspection shall consist of the inspections listed for groups A and B. Conformance inspection shall be performed on every lot of cable procured under this specification.

4.6.1 Inspection lot. An inspection lot shall consist of all cables of any one type produced under substantially the same conditions and offered for inspection at one time.

4.6.1.1 Lot rejection. In the event that failure is incurred in the samples as specified herein, the lot represented by the samples shall be rejected. The contractor may screen out defectives or rework the lot and submit it again for conformance.

4.6.2 Group A inspection. Group A inspection shall consist of the examination and tests provided in table VII. One sample from each 10,000 feet of cable shall be inspected for the visual and dimensional requirements and conductor resistance. The voltage test for insulated conductors shall be conducted on each reel prior to cabling. The voltage test and insulation resistance test on completed cable shall be performed on the entire lot of finished cable submitted in accordance with 4.6.1.

TABLE VII. Group A inspection.

Test	Requirement paragraph	Test paragraph
Visual and dimensional		
Conductor	3.5.1	4.7
Color code	3.5.5	4.7 and 4.8.2.4.2
Shields	3.5.6	4.7
Cabling	3.6.4	4.7 and 4.7.1
Markings		4.7
Size and weight	3.8.3	4.7
Workmanship	3.9	4.7
Electrical		
Conductor resistance	3.5.1.4	4.8.1.3
Voltage test (cable)	3.5.3.2	4.8.4.2.2
Insulation resistance	3.8.2.2	4.8.4.2.3
Voltage test (insulated conductors)	3.8.2.1	4.8.2.5.1.1 or 4.8.2.5.1.2
Shielded jacket	3.5.6.1	4.8.2.5.2

4.6.3 Group B inspection. Group B inspection shall consist of the tests specified in table VIII. The inspector shall choose not less than one but not more than three sets of samples from each lot submitted for group B inspection. Lot size for group B inspection shall be not more than 1000 lbs. for coating tests. Lot sizes for finished cable shall be limited to 25,000 feet. When specifically requested by the procuring activity, group B inspection may be omitted on orders of 1000 ft or less, provided the particular cable type has previously been manufactured and tested by the manufacturer and data is on file.

TABLE VIII. Group B inspection.

Test	Requirement paragraph	Test paragraph
Conductor		
Coating	3.5.1.3	4.8.1.2
Elongation of strands	3.5.1.1	4.8.1.1
Insulation		
Physical properties	3.5.2	4.8.2 through 4.8.2.1.2
Coding material		
Stripe durability	3.5.5.4	4.8.2.4.1
Stripe conductivity	3.5.5.1.1	4.8.2.4.2
Sheath	3.7	
Physical properties	3.7.2.3	4.8.3.1 through 4.8.3.1.4
Marking durability	3.7.5	4.8.3
Cable		
Ozone resistance	3.8.4	4.8.4.1.4
Mechanical tests		
Cold bend	3.8.1	4.8.4.1.2
Capacitance	3.5.3.4.1	4.8.2.5.4
Attenuation	3.5.3.4.2	4.8.2.5.3
Impedance	3.5.3.4.3	4.8.2.5.4

4.7 Visual and dimensional. The finished cables shall be given a visual and dimensional inspection for conformance to the applicable requirements in table VII.

4.7.1 Filler and separator. Data shall be supplied with each order certifying that when cotton issued as a filler material (3.6.1) or cable separator (3.6.5), the cotton has been fungus treated and conforms to the fungus test in accordance with MIL-STD-810.

4.7.2 Conductor joints or splices. With each order of cable, the manufacturer shall furnish certification that jointing or splicing of all conductors used in the cable is in conformity to 3.5.1.5.

4.8 Test procedures.

4.8.1 Conductor tests.

4.8.1.1 Physical tests. In order to determine the compliance of the copper conductor strands with the characteristics specified in 3.5.1.1, the elongation shall be measured by method 3211 of FED-STD-228. Five percent of the strands but not less than seven strands taken away from any one conductor of the sample shall be so tested. Tensile strength of steel strands shall be in accordance with 3.5.1.2.

4.8.1.1.1 Retests. If the results of physical tests on one conductor are found to be below the specified value for elongation, two more conductors shall be taken from the sample and 1% of the strands but not less than 10 strands taken from each of these conductors shall be tested. The average of all the strands tested shall determine acceptance or rejection of the lot.

4.8.1.2 Coating tests. Tinned strands shall be tested for continuity and adhesion of coating in accordance with A-A-59551.

4.8.1.3 Conductor resistance. The individual conductors shall be tested in accordance with method 6021 of FED-STD-228, except that the dc bridge measurements shall be made with an accuracy of 0.5% (see 3.5.1.4). To ascertain added length of conductor due to cabling, conductors shall be removed from a 5-foot length of cable, their straightened length shall be measured, and the ratio of straightened length of conductor to original length of cable shall be computed.

4.8.2 Insulation compound. Insulating compound shall be tested in accordance with the following physical and electrical tests to determine compliance with 3.5.2 and 3.5.3.

4.8.2.1 Physical tests. These tests shall be made not sooner than 48 hours after vulcanization of the cable sheath. The method of conducting these tests shall be as outlined in the succeeding paragraphs. In all cases, the test temperature shall be between 68 ºF to 83 ºF.

4.8.2.1.1 Ultimate elongation. Ultimate elongation tests shall be made in accordance with method 3031 of FED-STD-228.

4.8.2.1.2 Tensile strength. Tensile strength tests shall be made using a straight specimen in accordance with method 3021 of FED-STD-228.

4.8.2.2 Accelerated aging tests. Specimens shall be oven aged at a temperature of 208 ºF to 212 ºF for 48 hours.

4.8.2.2.1 Depreciation in elongation and tensile strength. After aging, the specimens shall be tested in accordance with 4.8.2.1.1 and 4.8.2.1.2 and the percent depreciation calculated.

4.8.2.2.2 Shrinkage. An 8 inch (203.20 mm) specimen shall be cut from the insulated conductor. The polyamide jacket shall be removed. The specimen shall then be cut to 6 inches (152.40 mm) with the conductor flush with the insulation. The specimen shall be heated in a forced convection air oven at 210±2 ºF for a period of 24 hours. The specimen shall be removed and allowed to return to room temperature. The amount the conductor extends beyond the insulation shrinkage shall be in accordance with 3.5.

4.8.2.3 Heat stability test (polyamide jackets).

4.8.2.3.1 Polyamide jackets over primary insulation. A one foot specimen shall be bent around a metal mandrel six times the outside diameter of the specimen for two turns and taped down on its ends. The specimen and the mandrel shall be placed in a gravity convection type oven at a temperature of 200±5 ºF for a period of 24 hours. Remove specimen and mandrel from oven and cool in a silica gel desiccator or equivalent until it returns to room temperature (1 hour minimum). Remove from desiccator and straighten the specimen. The specimen shall be visually inspected for tears and cracks. Wrinkles shall not be cause for rejection.

4.8.2.3.2 Polyamide jackets over shield. A sufficient length of specimen shall be used to insure at least six close turns when bent on a metal mandrel, six times the outside diameter of the specimen. Each turn shall be in contact with the next. The ends of the specimen shall be taped together in such a manner that the turns are held in place on the mandrel. The mandrel and specimen shall be suspended in a gravity convection type oven at a temperature of 300±5 ºF for a period of 15 minutes. The mandrel and specimen shall be removed from the oven and cooled in a silica gel desiccator or equivalent until the specimen is at room temperature (1 hour minimum). Remove from the desiccator and unwrap the coils. The specimen shall be visually inspected for tears and cracks. Wrinkles shall not be a cause for rejection.
Note: During this test, the insulation will soften and flow. This shall not be cause for rejection.

4.8.2.4 Colored stripe tests.

4.8.2.4.1 Durability test. A short specimen of finished wire or sheath shall be firmly clamped in a horizontal position with its upper longitudinal surface area freely exposed. A small steel mandrel 0.025 inch (.6 mm) diameter +/-0.001 inch (.03 mm) shall be repeatedly rubbed over the insulation surface at the stripe so that the longitudinal axis of the mandrel and specimen will be at right angles to each other. A weight shall be affixed to the jog holding the rubbing mandrel so that the combined jig and weight exerts a 500-gram thrust normal to the insulation surface. A motor-driven reciprocating cam mechanism and counter shall be used to permit an accurately measured number of abrasion strokes. The length of the stroke in one direction shall be 0.375 inch (9.53 mm) and the frequency of the stroke shall be 120 strokes per minute (each stroke consisting of a 180 degree-rotation of the eccentric drive mechanism). The direction of motion shall be along the axis of the wire or cable jacket and perpendicular to the axis of the mandrel. This procedure shall be repeated on one additional specimen selected for at least 50 feet apart. Specimens shall be examined for conformance to 3.5.5.4 and 3.7.5.

4.8.2.4.2 Surface resistance test. The surface resistance of the black stripe insulated conductors shall conform to 3.5.5.1.1 when tested in accordance with method 6041 of FED-STD-228. All specimens, after having been provided with the required electrodes but prior to testing, shall be cleaned by the procedure described in the test method. In positioning the specimens in the test chamber, the specimens shall be so placed that their ends are a minimum of one inch from any wall of the chamber.

4.8.2.5 Electrical tests.

4.8.2.5.1 Electrode spark test. Method 6211 of FED-STD-228 shall be used in conducting the spark test except that the speed of the specimen through the electrode shall be adjusted so that contact between the electrode and any point on the insulation of the specimen will be maintained for at least 0.25 second. The used of voltmeter-equipped spark testers shall be optional (see 3.5.3.1).

4.8.2.5.1.1 Dielectric test (insulated conductors). Each reel of insulated conductors shall be tested by the cable manufacturer in accordance with method 6111 of FED-STD-228 except that the soak time shall be reduced to 4 hours without stirring the bath and with both ends of the conductor tied together and connected to the high voltage. The test shall be conducted after extrusion of the polyamide. There shall be no evidence of breakdown when tested at the voltages of 3.5.3.2.

4.8.2.5.1.2 Impulse dielectric test. The impulse dielectric test shall be performed in accordance with method 3002 of MIL-STD-2223 to meet the requirements of 3.5.3.2 with exception that if any dielectric failures occur they must be cut out or suitably identified for subsequent removal along with a minimum of 6 inches (152.40 mm) of conductor on each side of the fault.

4.8.2.5.1.3 Water absorption test. Samples shall be removed from the finished cable and shall be thoroughly cleaned by scrubbing with water and a small brush or lintless cloth. The specimens shall be rinsed and dried by exposure to circulating air at a temperature of 120±3 ºF for a period of 24 hours. Test specimens of the insulated conductor shall be made up into a coil with an inside diameter of not less than 2 inches (50.80 mm). The specimens shall be supported by fitting the ends snugly through the cover of a vessel containing tap water. The specimens shall be of such length and so supported that not less than 5 feet of conductor is exposed below the plate and that the ends do not project more than 6 inches (152.40 mm) above the plate. The insulation shall be removed from the ends of a distance of 0.5 inch (12.70 mm). The water shall be maintained at a temperature 120±3 ºF. The conductors shall fit tightly to the cover, and the cover shall fit tightly to the vessel to prevent excessive evaporation. The level of the water shall be maintained flush with the side of the cover. The length of the conductor below the underside of the cover shall be taken as the length immersed. If the vessel is made of metal it shall be considered the electrical ground. If it is not of metal, a ground plate of suitable area shall be immersed in the water. All metal parts other than the conductor under tests shall be grounded. The capacitance shall be measured between the conductor and the ground, at 1000Hz, with a suitable alternating current bridge, with an accuracy of 1 pF of capacity and 0.001 power factor. All measurements shall be made at a temperature of 120±3 ºF without disturbing the test specimen in any manner. The capacitance shall be recorded in microfarads per 1000 feet of conductor immersed. The first measurement shall be made after 24 hours immersion at 120 ºF and shall be considered the original capacity. Subsequent measurements shall be made 7 days after the original measurements (see 3.5.3.3).

4.8.2.5.2 Capacitance. Capacitance tests shall be made, on coaxial conductors, in accordance with MIL-DTL-17.

4.8.2.5.3 Attenuation. Attenuation shall be measured, on coaxial conductors, in accordance with MIL-DTL-17.

4.8.2.5.4 Impedance. The characteristic impedance shall be determined on coaxial conductors with MIL-DTL-17.

4.8.3 Sheath. In order to determine the compliance of the sheath compound with the requirements of 3.7 the following test shall be made.

4.8.3.1 Physical tests.

4.8.3.1.1 Tension set. Except for the following, the maximum tension set shall be determined in accordance with ASTM D412. The minimum set shall be determined by elongating specimens until the 2 inch (50.80 mm) gage marks are 6 inches (152.40 mm) apart, releasing within 5 seconds and determining the distance between gage marks 1 minute after release. The set is the difference between this length and the original 2 inches (50.80 mm) gage length.

4.8.3.1.2 Ultimate elongation. Ultimate elongation tests shall be made in accordance with method 3031 of FED-STD-228.

4.8.3.1.3 Tensile strength. Tensile strength tests shall be making in accordance with method 3021 of FED-STD-228.

4.8.3.1.4 Tear strength. Tear strength tests shall be made in accordance with method 3111 of FED-STD-228.

4.8.3.1.5 Accelerated aging tests. The accelerated aging tests shall be made in accordance with method 4011 of FED-STD-228.

4.8.3.1.6 Oil resistance tests. Oil resistance tests shall be made in accordance with method 4221 of FED-STD-228.

4.8.4 Finished cable tests.

4.8.4.1 Mechanical tests. Samples of the completed cable prepared as specified in figure 1, connected in series (see figure 2) shall be subjected to the following tests: impact, bend and twist, respectively at a temperature of 68 ºF to 95 ºF. See figures 3, 4, and 5 for setups. In each of these tests, a 110 or 220 volt, 60 Hz, ac potential with a prescribed load current of not less than 0.5 ampere shall be indicated on a recording ammeter to permit the determination of failure caused either by broken conductors or by short circuits between conductors. Failure due to either cause shall terminate the test of a sample. The test procedures for impact, bend and twist respectively are approved tests and a similar method shall be followed in performing all mechanical tests (see 3.8.2). The value obtained shall be derived from test of three samples for the bend and twist and six samples for the impact. If any of the samples tested do not comply with the requirements set forth, the lot shall be rejected.

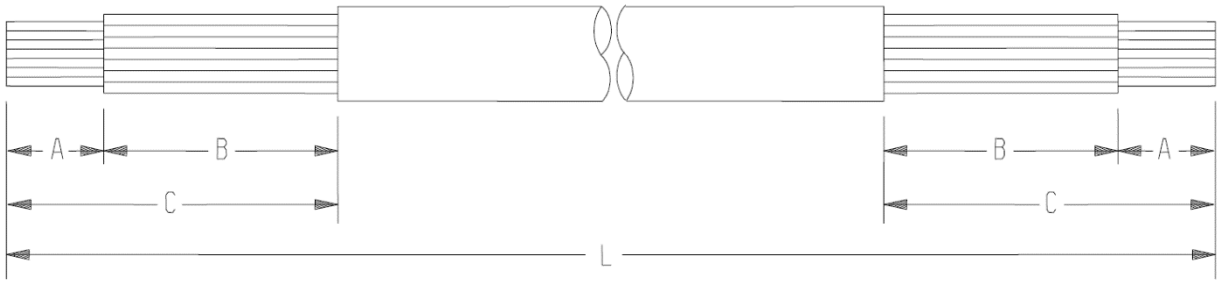

A = 1.5 inches (38.10 mm)
B = 2.0 inches (50.80 mm)
C = 3.5 inches (88.90 mm)

Set of samples to consist of
6 samples for impact, L = 16 inches (406.40 mm)
3 samples for bend, L = 42 inches (1066.80 mm)
3 samples for twist, L = 66 inches (1676.40mm)

NOTES:
1. Dimensions are in inches.
2. Metric equivalents are given for information only.

FIGURE 1. Cable samples.

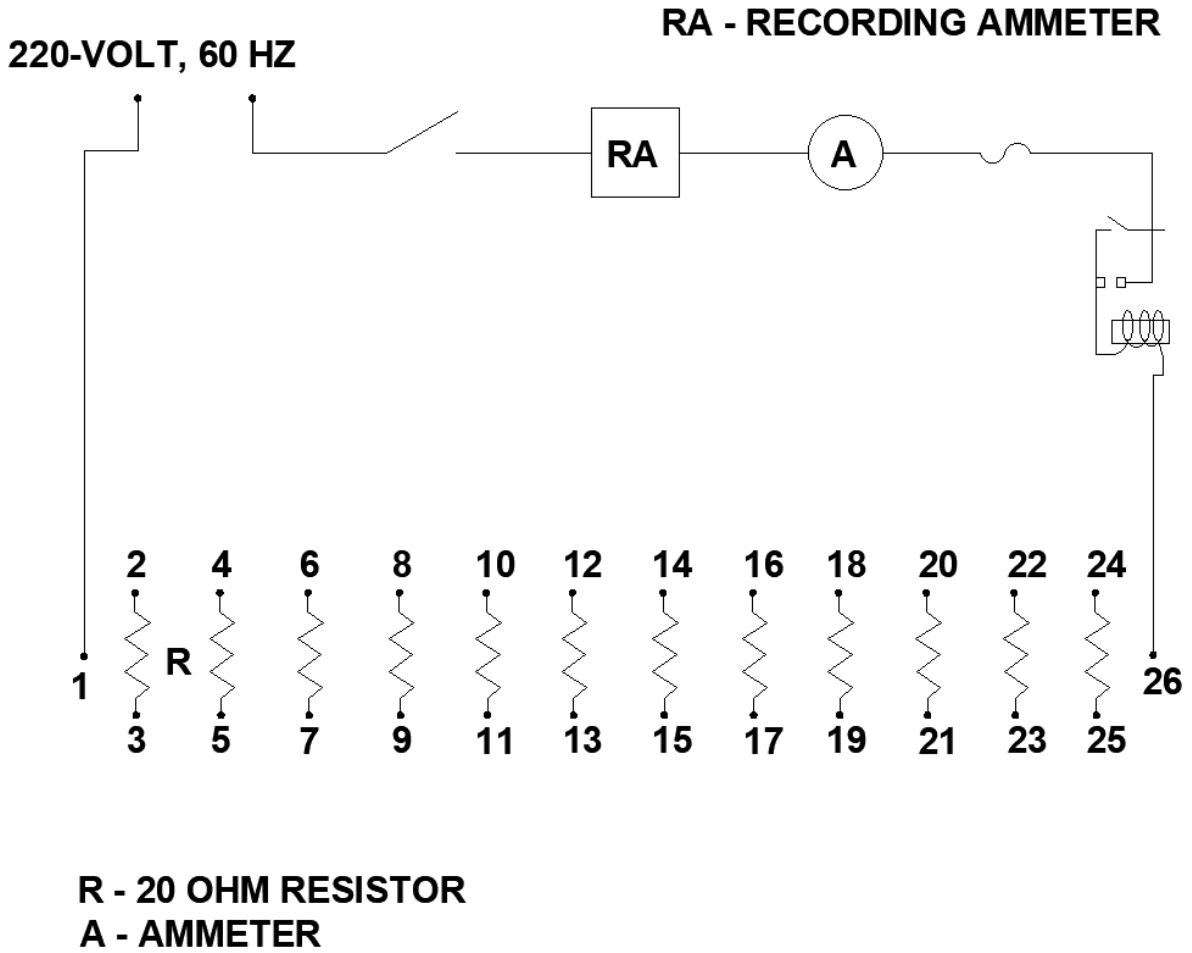

FIGURE 2. Cable testing electrical circuit.

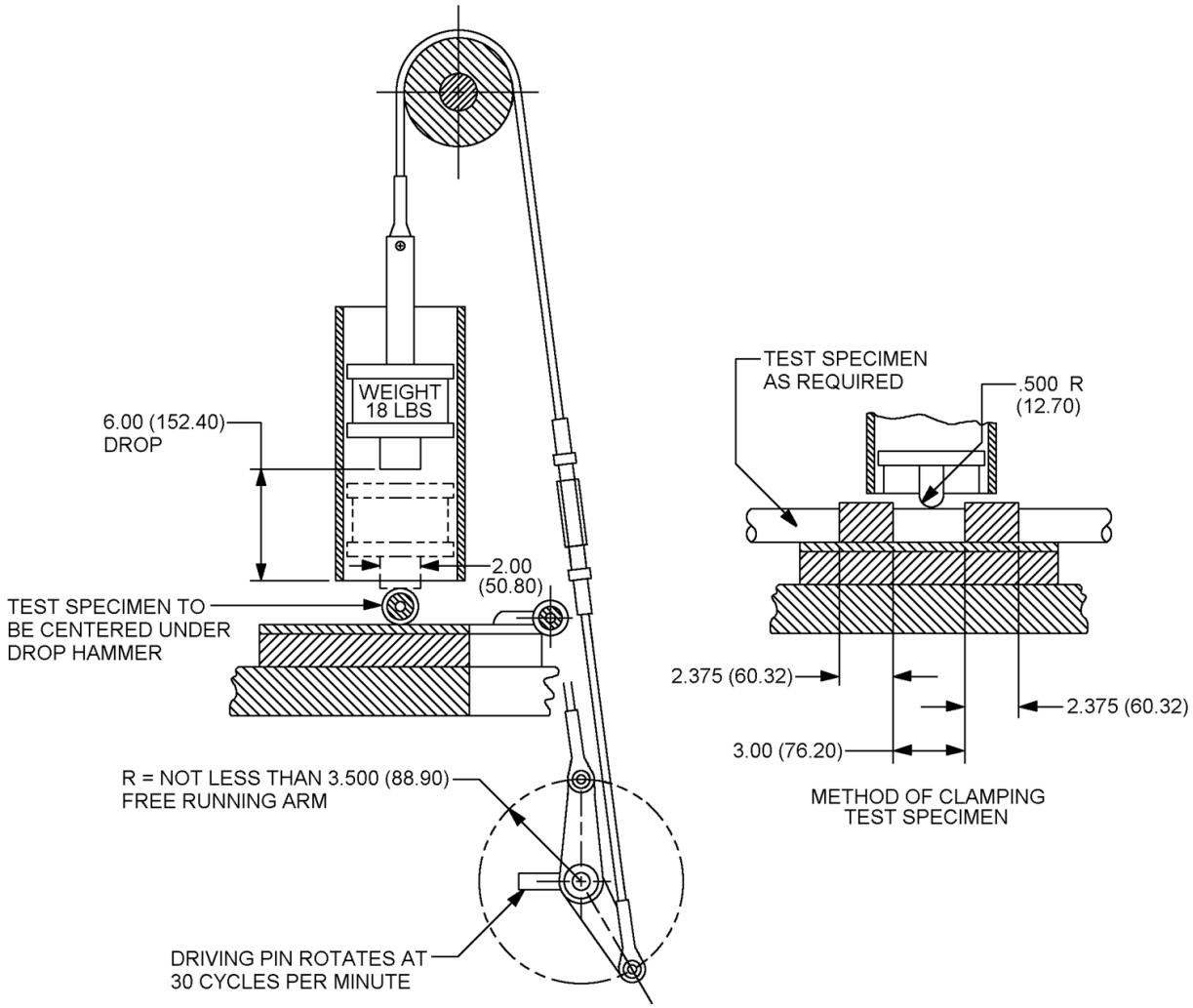

NOTES:

1. During test, a 60 cycle AC current of not less than 0.5 A to flow through conductors.
2. Dimensions are in inches. Metric equivalents are given for information only.

FIGURE 3. Impact test fixture, cable testing.

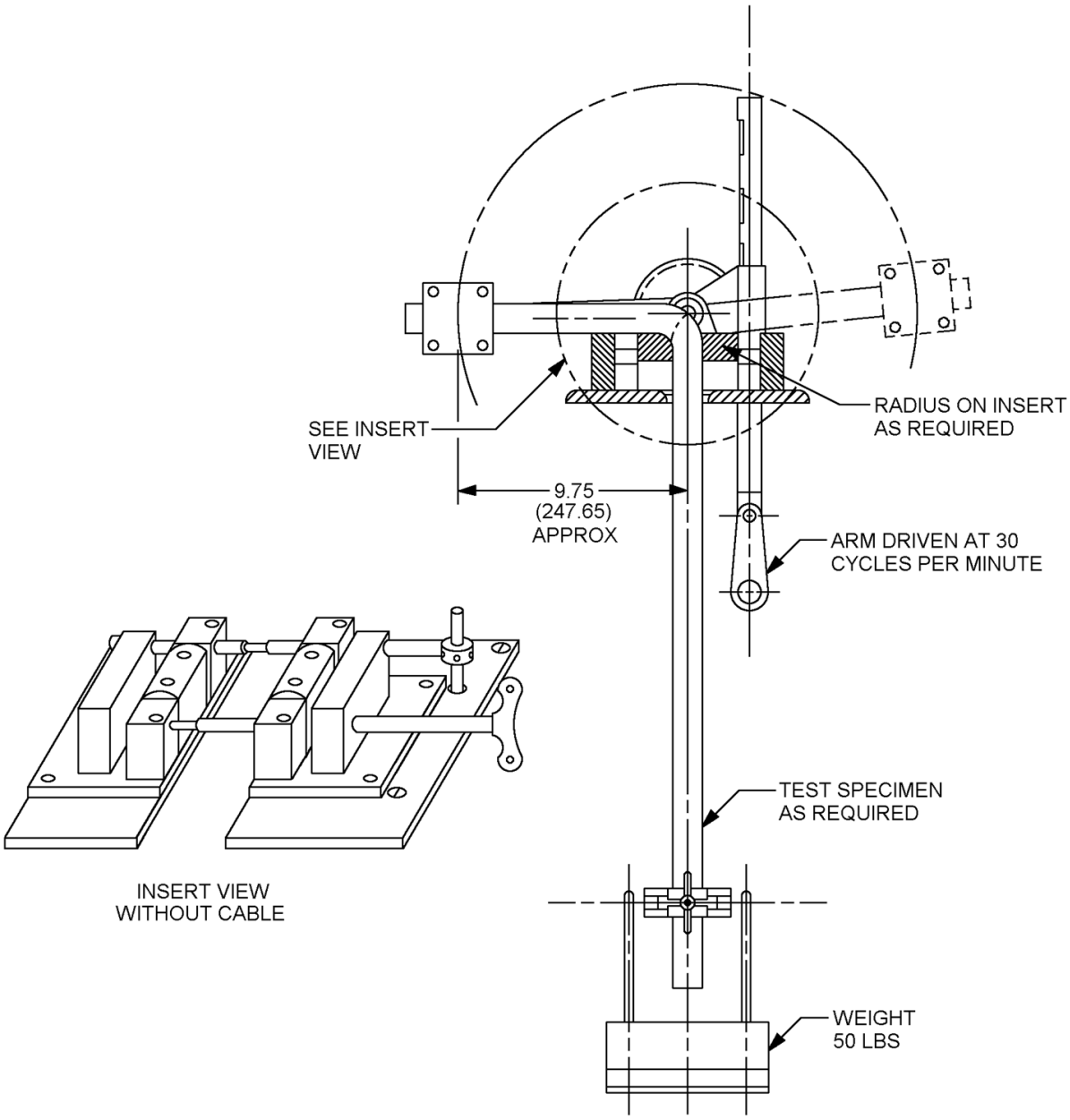

NOTES:

1. During test a 60 cycle AC current of not less than 0.5 A flow through conductors.
2. 1 cycle shall consist of 90º bend each side and return to the original position.
3. Dimensions are in inches. Metric equivalents are given for information only.

FIGURE 4. Bend test fixture, cable testing.

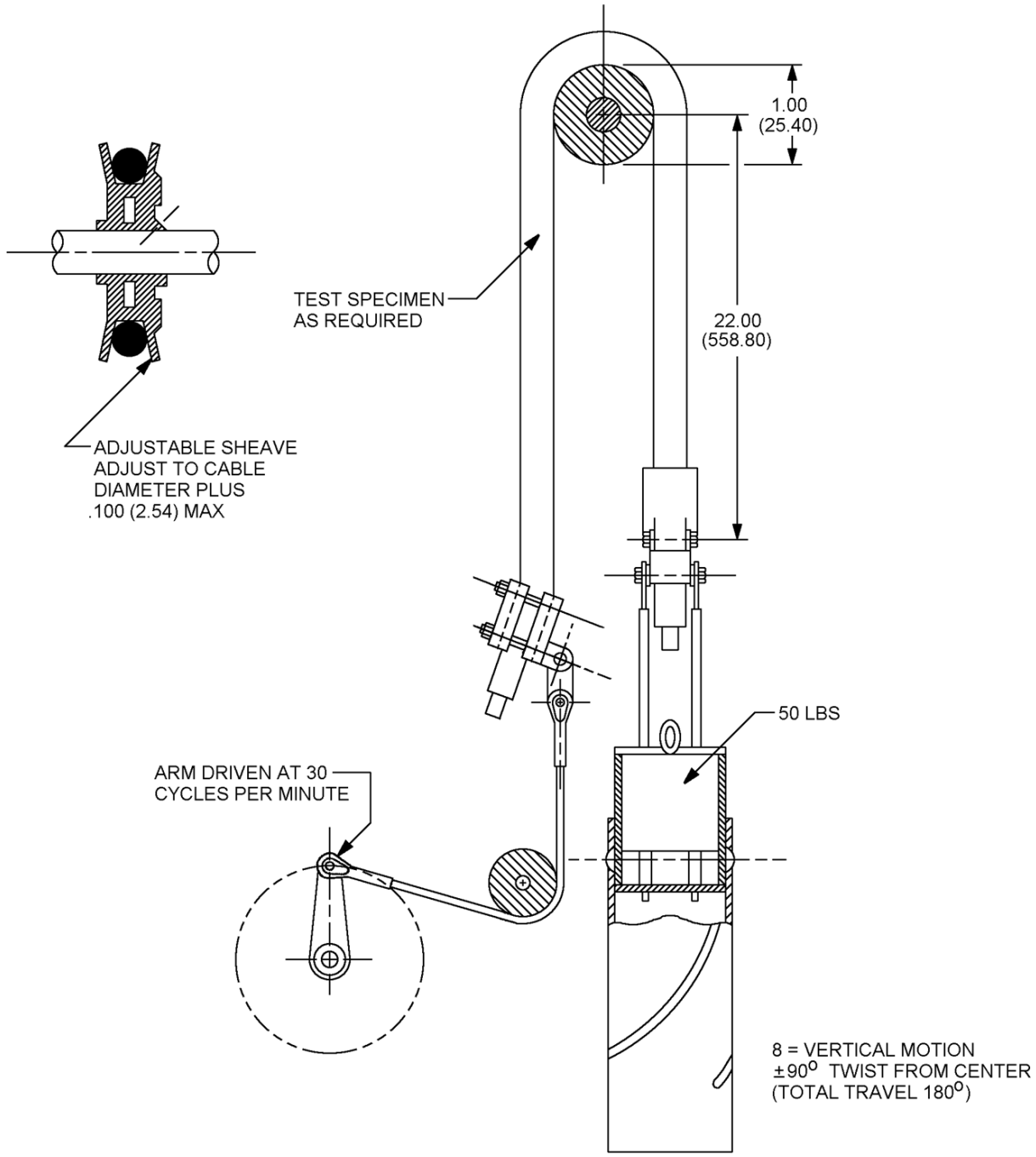

NOTES:

1. Twist per inch of active length to be kept constant when changing pulley and larger clamping arm.
2. During test a 60 cycle AC current of not less than 0.5 A to flow through conductors.
3. Dimensions are in inches. Metric equivalents are given for information only.

FIGURE 5. Twist test fixture, cable testing.

4.8.4.1.1 High and low temperature. Specimens shall be temperature stabilized for a minimum of 48 hours at 160±2 ºF and while still at this temperature, tested for impact, bend and twist for a minimum of one half the cycles specified in accordance with 3.8.2. The temperature shall gradually reduce to -65±2 ºF and the specimens permitted to remain at this temperature for a minimum of 48 hours. While still exposed at this temperature, the impact, bend, and twist tests shall be conducted for a minimum of one half the cycles specified in accordance with 3.8.2. At the conclusion of the test, the specimens shall be returned to room temperature. If failure occurs in any of the specimens an additional set of specimens shall be tested. Further evidence of failure will result in the withholding of approval (see Appendix A).

4.8.4.1.2 Cold bend. Two specimens of cable shall be subjected to cold bend testing at a temperature of -65±2 ºF. The specimens shall be placed in the cold chamber in a nonflexed position and maintained at the required temperature for a minimum of 48 hours. Without removal from the cold chamber each specimen shall be bent around a mandrel as specified in table IX at a rate of five turns per minute for one complete turn. Upon removal from the cold chamber the specimens shall be examined for conformance to 3.8.1. The insulated conductors shall be removed from the jacket and tested by application of the test voltages specified in the applicable specification sheet.

4.8.4.1.3 Torque test. Two specimens of cable shall be subjected to cold bend testing at a temperature of -65±2 ºF. Prior to cold bend testing the specimens shall be oven-aging at a temperature of 160±2 ºF for 2 days. After oven aging, the specimens shall be placed in the cold chamber in a nonflexed position and maintained at the required temperature for a minimum of 48 hours prior to testing. Without removal from the cold chamber, each specimen shall be bent around a mandrel as specified in table IX at a rate of five turns per minute for one complete turn. The torque required to accomplish the turn shall be in accordance with 3.8.1.1. At the conclusion of the test the temperature shall be gradually returned to room temperature and examined for conformance to 3.8.1. The insulated conductors shall be removed from the jacket and tested by application of the test voltage specified in the applicable specification sheet for one minute while submerged in water.

TABLE IX. Cold bend mandrel sizes. 1/ 2/

Cable outside diameter inch (mm)		Mandrel size maximum inch (mm)	
From	To	Unshielded	Shielded
.000 (.00)	.300 (7.62)	1.0 (25.40) X OD	3.0 (76.20) X OD
.301 (7.65)	.350 (8.89)	2.0 (50.80) X OD	3.0 (76.20) X OD
.351 (8.92)	.450 (11.43)	2.5 (63.50) X OD	3.0 (76.20) X OD
.451 (11.46)	.550 (13.97)	3.0 (76.20) X OD	3.0 (76.20)X OD
.551 (14.00)	.750 (19.05)	4.0 (101.60) X OD	4.0 (101.60)X OD
.751 (19.08)	.950 (24.13)	5.0 (127.00) X OD	5.0 (127.00)X OD
.951 (24.16)	1.500 (38.10)	6.0 (152.40) X OD	6.0 (152.40)X OD
1.501 (38.13)	2.000 (50.80)	8.0 (203.20) X OD	8.0 (203.20) X OD
2.001 (50.83)	and over	10.0 (254.00) X OD	10.0 (254.00) X OD

1/ Dimensions are in inches.
2/ Metric equivalents are given for information only.

4.8.4.1.4 Ozone resistance. Two samples shall be prepared for ozone testing by bending around mandrel as specified in table X.

TABLE X. Cable sizes and mandrel diameters for ozone testing. 1/ 2/

Cable outside diameter inch (mm)	Mandrel diameter inch
.500 (12.70) and under	4 x cable OD
.501 (12.73) to .750 (19.05)	5 x cable OD
.751 (19.08) to 1.250 (31.75)	6 x cable OD
1.251 (31.78) to 1.750 (44.45)	8 x cable OD
1.751 (44.48) to 2.250 (57.15)	10 x cable OD

1/ Dimensions are in inches.
2/ Metric equivalents are given for information only.

The mandrels may be removed after bending, provided the diameter of bend of the cable samples is maintained for a minimum of 180 degrees of bend. Prior to placing the samples into the ozone chamber, the samples shall be wiped with a clean cloth to remove dirt, sweat and surface moisture. The samples shall be exposed as specified in ASTM D1149 except that the air shall have an ozone concentration of 50±3 parts per 100,000,000 by volume and circulated at 120 ºF for a period of 7 days. Upon removal form the ozone chamber the samples shall be examined for conformance to 3.8.4.

4.8.4.2 Electrical tests.

4.8.4.2.1 Test equipment. The contractor shall supply suitable bridge equipment, source of testing current and other necessary equipment required for accurately making the electrical measurements specified. The dc bridge measurements shall be made within an accuracy of 0.5%. The power source shall be capable of delivering a testing potential of the magnitude and frequency specified, and shall be equipped with a variable control and meter for regulating and measuring output. The contractor shall make available to the contracting officer of inspector a description, wiring diagram, and operating instructions covering the equipment to be employed. The inspector may satisfy himself by checking the equipment against calibrated standards so that accurate and satisfactory results are obtained.

4.8.4.2.2 Voltage test (finished cable). With alternate conductors bunched in two groups, the voltage shall be applied between conductors, and between conductors and ground for a period of one minute on each complete length of cable. Conductors without individual shields may be tested singly against all other conductors or arranged in two or more groups, provided full voltage is impressed between adjacent conductors. Conductors with individual shields and shielded pairs may be arranged in groups with voltage applied between conductors and grounded shields. The test voltage shall be attained by raising the voltage from zero to the value specified within 30 seconds (see 3.8.2.1). Where shield isolation is specified for single conductors and complexes the voltage shall be 1500 volts. Specimens shall not be submerged in water for the voltage test.

4.8.4.2.3 Insulation resistance. Immediately after the voltage test, the cable shall be tested dry for insulation resistance, according to method 6031 of FED-STD-228, except that the test potential shall be 200 volt minimum and the temperature correction factors shall be supplied and certified by the contractor. Except where otherwise specified in the applicable specification sheet, conductors may be tested singly or grouped in accordance with the connections used in the voltage test of 4.8.4.2.2 (see 3.8.2.2).

5 PACKAGING

5.1 Packaging. For acquisition purposes, the packaging requirements shall be as specified in the contract or order (see 6.2). When packaging of materiel is to be performed by DoD personnel or in-house contractor personnel, these personnel need to contact the responsible packaging activity to ascertain packaging requirements. Packaging requirements are maintained by the Inventory Control Point's packaging activities within the Military Service or Defense Agency, or within the military service's system commands. Packaging data retrieval is available from the managing Military Department's or Defense Agency's automated packaging files, CD-ROM products, or by contacting the responsible packaging activity.

6. NOTES

(This section contains information of a general or explanatory nature that may be helpful, but is not mandatory.)

6.1 Intended use. Cables covered by this specification are used or interconnecting fire control instruments, generator units, weapons in anti-aircraft artillery and guided missile systems. Cables are intended for use where oil, ozone, and weather resistance are of major importance and flexibility over an ambient temperature range of -65 ºF and 160 ºF is necessary. Cables are stretched on the ground or laid in a shallow trench where the terrain may vary from swamp to dry, rocky ground. There is frequent realign and unreeling which may cause kinking, twisting and dragging when in contact with the ground.

6.2 Acquisition requirements. Acquisition documents should specify the following:

a. Title, number, and date of this specification.

b. Title, number and date of applicable specification sheet.

c. Military PIN.

d. Length of cable required.

e. Level of protection required.

f. If all white or natural insulation may be substituted for color coding (see 3.5.5).

g. Any deviations from specification requirements, such as marking or increased shielding, where such deviation do not affect performance requirements. Data for any design changes made by the contractor should be provided to the contracting officer.

h. Whether conductor sizes are included in the cable identification.

i. Whether shields, if any are driven.

j. Any special or additional test requirements.

k. Whether samples for mechanical tests are required and the laboratory where the tests will be conducted.

l. Packaging (see 5.1).

m. First article contract requirements (see 6.2.1).

6.2.1 First article. When first article inspection is required, the contracting officer should provide specific guidance to offerors, whether the item(s) should be a preproduction sample, a first article sample, a first production item, a sample selected from the first production items, a standard production item from the contractor's current inventory (see 3.3), and the number of items to be tested as specified in 4.4. The contracting officer should also include specific instructions in acquisition documents regarding arrangements for examinations, approval of first article test results, and disposition of first articles. Invitations for bids should provide that the Government reserves the right to waive the requirement for samples for first article inspection to those bidders offering a product which has been previously acquired or tested by the Government, and that bidders offering such products, who wish to rely on such production or test, must furnish evidence with the bid that prior Government approval is presently appropriate for the pending contract. Bidders should not submit alternate bids unless specifically requested to do so in the solicitation.

6.3 Subject term (key word) listing.

Coaxial
Polyamide
Copper strands
Separator

6.4 Definitions. For the purpose of this specification, the definitions given should apply.

6.4.1 Mold. The word mold as used in this specification means a container to hold the polychloroprene sheath in shape during the vulcanizing and curing process.

6.4.2 Length of lay. The length of lay of any helically wound strand or insulated conductor is the axial length of one complete turn of the helix, in inches.

6.5 Superseded classification references. Listed in table XII for reference purposes only are obsolete classification data appearing in superseded versions of this document.

6.6 Tin whisker growth. The use of alloys with tin content greater than 97 percent, by mass, may exhibit tin whisker growth problems after manufacture. Tin whiskers may occur anytime from a day to years after manufacture and can develop under typical operating conditions, on products that use such materials. Conformal coatings applied over top of a whisker-prone surface will not prevent the formation of tin whiskers. Alloys of 3 percent lead, by mass, have shown to inhibit the growth of tin whiskers. For additional information on this matter, refer to ASTM B545 (Standard Specification for Electrodeposited Coatings of Tin).

6.7 Amendment notations. The margins of this specification are marked with vertical lines to indicate modifications generated by this amendment. This was done as a convenience only and the Government assumes no liability whatsoever for any inaccuracies in these notations. Bidders and contractors are cautioned to evaluate the requirements of this document based on the entire content irrespective of the marginal notations.

TABLE XI. PIN data.

M13777/1-				
020403	030470	S031170	040657	041488
020405	030485	031355	040695	041635
020425	030565	S031640	040870	041655
S020500	030575S	040440	041065	041754
020555	030635	040470	041135	S041886
020610	030675	040500	041215	050502
020645	030945	040560	041260	041210
030445	031115	040635S	041335	
M13777/2-				
060410S	070618	080766	100660	150885
060480	070730	080840	100870	150915S
060565	070823S	080918	101091	
061530	070930	090540	120620	
061805	071090	090675	120650S	
070590	S080625	100595	130685	
M13777/3-				
160636	S161375S	180675	S190965S	200935
S160878S	170752	180848	191110S	
161065S	170874	S190875	191140	

TABLE XII. Obsolete PIN data.

M13777/4-				
211055	S221385	241215	280805	
211115S	240966	261065S	321355	
211345	241215S	271100S		
M13777/5-				
341273S	371142	391115S	S462080S	
360860	371193S	401485S	471374S	
S361055	371314S	401582S	S521235	
361420S	371327S	402950		
371065S	371517S	421010SC		
M13777/6-				
601330	651125			
601495S	782166S			
601665S				
601734S				
601845S				
601931S				

PROCEDURE FOR FIRST ARTICLE INSPECTION

A.1 SCOPE

A.1.1 Scope. This appendix details the procedure for submission of samples, with related data for first article inspection of cable types covered by this inspection. The procedure for extending first article of the required sample to other cable types covered by this specification is also outlined herein. This appendix is a mandatory part of the specification. The information contained herein is intended for compliance.

A.2 SAMPLE

A.2.1 Sample. One 20-foot sample of unrestrained conductor strand for each size of strand in the cable shall be submitted for physical and coating tests. Two sets of samples shall be submitted for mechanical tests. A set of stripped samples conforming to figure A-1 shall consist of: six 16 inch (406.40 mm) lengths for impact; three 66 inch (1676.40 mm) lengths for twist; three 42 inch (1066.80 mm) lengths for bend. Lengths for test for cables 1.5 inch (38.10 mm) diameter and larger shall be 80 inches (2032.00 mm). One additional 50 foot (15240.00mm) length shall be submitted for all other tests. When submitting type 421010SC, this footage should be increased to 100 feet (30480.00mm). Three copies of certified test data on approved format (factory report) as contained herein shall accompany submission.

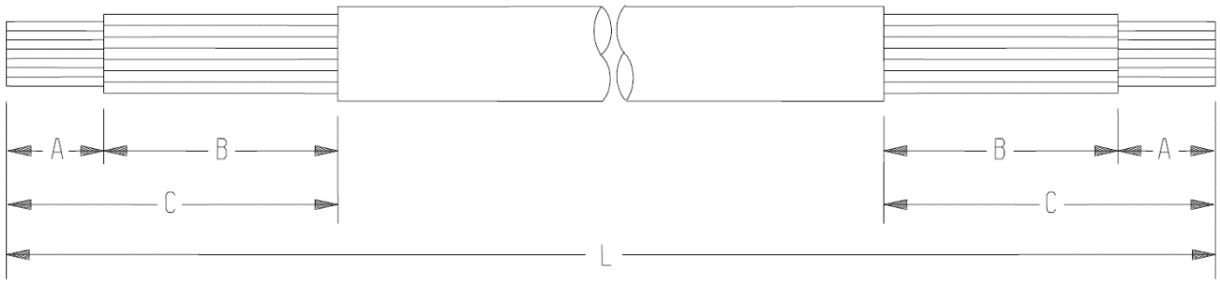

A = 1.5 inches (38.10 mm)
B = 2.0 inches (50.80 mm)
C = 3.5 inches (88.90 mm)

Set of samples to consist of
6 samples for impact, L = 16 inches (406.40 mm)
3 samples for bend, L = 42 inches (1066.80 mm)
3 samples for twist, L = 66 inches (1676.40mm)

NOTES:
1. Dimensions are in inches.
2. Metric equivalents are given for information only.

FIGURE A-1. Cable samples.

A.3 EXTENT OF FIRST ARTICLE TEST

A.3.1 Representative type submission. Approval of the specified first article test sample will extend first article approval to all applicable cable types. The first article test identifying group number represents the above outlined coverage (see table A-I).

TABLE A-I. Representative type submission.

First article identifying group number	First article test sample	Extension of first article approval cable type designations			
3	040870	020610	030675	040870	
		030635	S031170	041215	
		031115	040695	041488	
		S031640	041135	041754	
		041065	041655	S041886	
		041260	S161375S	211345	
		041635	782166S	041210	
		061805	030565		
		S221385	030945		
		020645	031355		
6	421010SC	020405	020425	020555	030470
		030485	030575S	040500	040635S
		040657	060565	070618	070823S
		070930	071090	S080625	090540
		090675	100660	130685	150885
		150915S	160636	S160878s	161065S
		170752	170874	S190875	S190965S
		191110S	200935	211055	211115S
		170752	241215S	261065S	321355
		191110S	371142	371517S	391115S
		240966	S462080S	601330	S521235
		371065S	601665S	601734S	601495S
		421010SC			601845S
		601931S			

FIRST ARTICLE TEST
(Factory Report)

Submitted by XYZ Cable Co.
Purchase Order No._____

Date_____Cable Type No._____
Tape Marker_____Ft to_____Ft

I. Electrical tests and weight:

Reel number	Length (ft)	Voltage test (volts)	Insulation resistance (meg-1000 ft)	Conductor resistance (ohms/1000 ft) Average maximum	Weight (lbs/1000 ft)

II. Coating test:

1. Average number of cycles passed on continuity of coating test.
2. Minimum number of cycles passed on continuity of coating test.
3. Average number of cycles passed on adherence of coating test.
4. Minimum number of cycles passed on adherence of coating test.

III. Results of physical and mechanical tests:

1. Copper conductor strands:

    1. Size of strand number _____.
    2. Number of strands tested _____.
    3. Average elongation _____.
    4. Maximum elongation deviation from average _____ inches.
       For retest, repeat 1 through 4.

2. Steel strands:

    1. Number of strands tested _____.
    2. Average tensile strength _____psi.
    3. Average diameter _____inches.

3. Insulation compound:

1. Physical:

	Original	Aged
a. Ultimate elongation, inch (min.)	_____	_____
b. Tensile strength, psi (min.)	_____	_____

2. Water absorption:

a. Original capacity _____picofarads.
b. Capacity after 7 days immersion _____picofarads.

3. Thickness of insulating wall:

a. Conductor size number _____ _____inches.
b. Conductor size number _____ _____inches.

4. Sheath compound:

1. Physical	Original	Oxygen aged	Oil aged
Tear strength lb/inch (min).			
Tension set inch (max).			
Ultimate elongation inch (min).			
Tensile strength psi (min).			

2. Thickness of jacket wall _____ inches.

5. Cable:

1. Mechanical tests:

a. Minimum impact _____cycles.
b. Minimum bend _____cycles.
c. Minimum twist _____cycles.

2. Maximum diameter.

3. Low temperature test – remarks on performance _____ ºF.

4. Ozone test results.

It is hereby certified that the above values are true and correct, and in accordance with the specification.

_____
Signature

CONCLUDING MATERIAL

Custodians:
Army - AR
Navy - AS
Air Force - 85
DLA - CC

Preparing activity:
DLA - CC

(Project 6145-2024-026)

Review activities:
Army - AT, CR, CR4
Navy - EC, MC

NOTE: The activities listed above were interested in this document as of the date of this document. Since organizations and responsibilities can change, please verify the currency of the information above using the ASSIST Online database at https://assist.dla.mil.